Navy Integrated Learning Environment
Content Design Handbook:
Business Rules and Specifications

July 1 2004
DRAFT VERSION 1.0

How to Use this Document

The document serves as the first step in understanding the Navy Integrated Learning Environment (ILE) Navy Reusable Object Model (NROM) for the design and development of ILE content. The initial rules and guidelines listed in this document are a starting point in the process of developing the NROM. This document is not the final set of rules and guidelines and will be modified as feedback is received. The document will be used to develop Navy ILE content that adheres to both the Navy ILE vision and mission and the NROM.

The Navy Integrated Learning Environment Content Design Handbook is organized into five parts:

Part One: The Navy ILE and NROM

Briefly describe the vision, mission, and goals of the NAVY ILE and the role that the NROM has within the Navy ILE. Describes the concepts of interoperability, reuse, repurpose, and reference (R^3), and discusses the relationship between NROM and the Advanced Distributed Learning (ADL) Shareable Content Object Reference Model (SCORM™).

Part Two: Applying the NROM

Focuses on the application of NROM for developing learning events with discussion and examples for designing for the ILE and production for the ILE

Part Three: ILE Content Development Supporting Documentation

Supporting documentation for the design, development, implementation, and maintenance of instructional content development for the ILE includes: (a) The Training Project Management Development Plan, (b) The Instructional Media Design Package (design plan and prototype), and (c) The Style Guide.

Part Four: Technical Specifications

This section outlines the technical specifications and guidelines required to insure the technical compatibility between instructional content and the Integrated Learning Environment. In future releases of this document, the guidance provided will increase significantly in scope and level of detail. The intent of this initial release is focus strictly on providing the core guidance deemed most critical to insuring compatibility with the ILE.

Part Five: References and Appendices

The reference list is provided to document resources used to compile information in this document. These references provide useful information for additional reading on a variety of related topics. The appendices provide a glossary, additional detailed information and a variety of examples for use and reference.

This document is an example of Reuse, Repurpose, and Reference (R^3) in that it has repurposed Shareable Content Object Model (SCORM™) Sequencing content from the Learning Systems Architecture Lab at Carnegie Mellon University. Their work, except where otherwise noted, is licensed under the Creative Commons Attribution-NonCommercial-ShareAlike License. To view a copy of this license, visit http://creativecommons.org/licenses/by-nc-sa/1.0 or send a letter to Creative Commons, 559 Nathan Abbott Way, Stanford, California 94305, USA.

Attribution Noncommercial Share Alike

TABLE OF CONTENTS

PART ONE: THE NAVY ILE AND THE NROM 1

1.0 INTRODUCTION 1
1.1. Purpose Statement 1
1.2. The Relationship between the Navy ILE and NROM 1
1.3. Navy ILE Overview 1
1.3.1. Navy ILE Vision 1
1.3.2. Navy ILE Mission 1
1.3.3. Navy ILE Goals 2
1.4. Task Force EXCEL (TFE) 2
1.5. Interoperability 3
1.6. Navy Reusable Object Model (NROM) 3
1.6.1. Reuse, Repurpose, and Reference (R3) 3
NROM and SCORM™ 4
1.6.3. NROM Metadata 6
1.6.4. Repository 7

2.0 THE NAVY REUSABLE OBJECT MODEL DEFINED 8
2.1. Asset 10
2.2. Reusable Instructional Object (RIO) 11
2.3. Reusable Learning Object (RLO) 12

PART TWO: APPLICATION OF THE NROM 14

3.0 DESIGNING FOR THE ILE 14
3.1. Designer/Developer Qualifications to Develop ILE NROM Content 14
3.1.1. What Designers Should Know About the SCORM™ RTE 16
3.1.2. What Designers Should Know About the SCORM™ CAM 16
3.1.3. What Designers Should Know About SCORM™ SN 16
3.1.4. SCORM™ Resources for Instructional Designers (IDs) 16
3.1.5. Understanding NROM and SCORM™ Prior to Beginning the ISD Process 17
3.2. Analysis 17
3.2.1. Media Analysis 17
3.2.2. Organizational Analysis 18
3.2.3. Environmental Analysis 18
3.3. Costing 18
3.4. Instructional Design 18
3.4.1. Reusable Learning Objects and Instructional Design 18
3.4.2. Learning Objectives 20
3.4.3. Instructional Design Theories and Approaches 21
3.4.4. Integrating Metacognitive Strategies 21
3.5. Legacy Content 22
3.5.1. Maintenance and Management 22
3.5.2. Processes 22

3.5.3. Transition Plan 23
3.6. Assessment Strategy 23
3.6.1. General Assessment Strategy 23
3.6.2. Assessment Design Decisions 24
3.6.3. Assessment Items and Assessment Instruments 26
3.6.4. Aligned with Learning Outcomes 27
3.6.5. Feedback 29
3.6.6. Remediation 29
3.6.7. Aggregating Assessments 29
3.7. Content Organization and RIO Design within NROM 30
3.7.1. NROM Content and Instructional Integrity 30
3.7.2. Designer Decisions 33
3.7.3. Identifying and Designing RIOs—Overview 33
3.7.4. Moving from a Traditional Course Structure to NROM 34
3.7.5. Designing RIOs from Existing Instructional Material 38
3.7.6. Designing RIOs for New ILE Instructional Materials 43
3.8. Preparing for Production 44
3.8.1. Develop Instructional NROM Metadata 44
3.8.2. Communicating the Instructional Design 51
4.0 PRODUCTION FOR THE ILE 52
4.1. Applying the SCORM™ API to NROM 52
4.2. Content Sequencing 52
4.2.1. Sequencing Functionality in SCORM™ 2004 55
4.2.2. Preparing to Sequence Your Content 56
4.2.3. Understanding Sequencing Terminology 57
4.2.4. Simplifying Content Sequencing 58
4.3. Develop and Code NROM Metadata 59
4.3.1. Acquire Instructional Metadata 59
4.3.2. NROM AND SCORM™ Metadata 60
4.4. Content Packaging 64
5.0 ADDITIONAL DELIVERY METHODS 66
5.1. Performance Support 66
5.2. Job Aids 66
5.3. PC Simulation 66
6.0 EVALUATION 66
6.1. Formative Evaluation 66
6.2. Summative Evaluation 66
6.3. Training Effectiveness Evaluation (TEE) 66

PART THREE: ILE CONTENT DEVELOPMENT SUPPORTING DOCUMENTATION 68

7.0 SUPPORTING DOCUMENTATION 68
7.1. Training Project Management Development Plan (TPMDP) 68

7.1.1. Definition 68
7.1.2. Purpose 68
7.1.3. Content 68
7.2. Instructional Media Design Package (IMDP) 68
7.2.1. Definition 68
7.2.2. Purpose 69
7.2.3. Content 69
7.2.4. Review and Approval 69
7.2.5. Quality Assurance Procedures 70
7.3. The Style Guide 70
7.3.1. Definition 70
7.3.2. Purpose 70
7.3.3. Content 70

PART FOUR: CONTENT DEVELOPMENT TECHNICAL SPECIFICATIONS .. 76

8.0 TECHNICAL SPECIFICATIONS INTRODUCTION 76
8.1. ILE Architectural Overview 76
8.1.1. Navy Knowledge Online (NKO) Portal 77
8.1.2. Navy E-Learning Learning Management System (LMS) 77
8.1.3. Learning Content Management System (LCMS) 77
8.1.4. Corporate Enterprise Training Activity Resource System (CeTARS) 77
8.1.5. Navy Training Management and Planning System (NTMPS) 78
8.1.6. Skill Object Data Mart 78
8.1.7. 5 Vector Model (5VM) 78
8.2. Statement of Work (SOW) Specifications 78
8.2.1. Data Model 78
8.2.2. Data Item Descriptions (DIDs) 78
8.2.3. Data Rights 79
8.3. Tool Selection 79
8.4. Delivery Environment 79
8.5. Workstation Minimum Hardware Specifications 79
8.6. Gold Disk Contents 80
8.7. Blue Disk Contents 81
8.8. 508 Accessibility 81
8.9. DITSCAP/SSAA 82
8.10. Mobile Code 82
8.11. Bandwidth Constraints 83
8.12. Delivery Format 83
8.13. User Control of Lengthy Operations 84
8.14. Content to LMS Communication 84
8.14.1. Functions of the API Adapter Object 84
8.14.2. Data Transfer API Functions 85
8.15. File Structure, Naming and Storage 86
8.16. Databases/Data Sources 86

8.17. Server Side Scripting 86
8.18. Client Side Scripting 87
8.19. Cascading Style Sheets 87
8.20. Streaming Media 87
8.21. Java Virtual Machine 88
8.22. Testing 88
9.0 CONTENT SUBMISSION METHOD 89
9.1. Deliverables 89
9.2. Manifest Properties 89
9.3. Content Packaging 90
9.4. Life Cycle Management 91
10.0 OPERATIONAL AVAILABILITY 91
10.1. Change Process 91
10.2. Scheduling Work 91
10.3. Configuration Management 91
11.0 COPYRIGHT 91
PART FIVE: REFERENCES AND APPENDICES 94
12.0 REFERENCES 94
13.0 APPENDICES 99
Appendix A: Glossary 99
Appendix B: SCORM™ Basics 106
Appendix C: NROM Metadata Requirements 108
Appendix D: Job Task Analysis Data and Accompanying ISD Example ..... 128 ~~129~~
Appendix E:Instructional Design Theories ..... 137 ~~138~~
Appendix F: Mecognitive Strategies ..... 146 ~~147~~
Appendix G: Characteristics of Good Assessment Practices ..... 150 ~~152~~
Appendix H: Nrom Examples and Models of Content Sequencing ..... 154 ~~155~~
Appendix I: Sample Statement of Work ..... 181 ~~182~~
Appendix J: Nrom Examples and Models ..... 208 ~~206~~

Table of Figures

Figure 1: SCORM™ and NROM Hierarchies 7
Figure 2: NROM Hierarchy vs. SCORM™ Hierarchy .....8 ~~9~~
Figure 3: NROM RLOs.....10
Figure 4: Asset.....11
Figure 5: Reusable Instructional Objects (RIOs).....11
Figure 6: Reusable Learning Objects (RLOs) as aggregations.....13
Figure 7: NROM component reuse from Assets to curricula.....32
Figure 8: Determining amount of reusability versus context across NROM components 32
Figure 9: Example of a traditional course content structure diagram 37
Figure 10: RIOs created from the existing course depicted in Figure 9 41
Figure 11: An additional RLO created from.....43
Figure 12: SCORM™ and NROM Hierarchies 53
Figure 13: Sequencing in CBT lessons.....53
Figure 14: Sequencing in SCORM™ 1.2.....53
Figure 15: Sequencing in SCORM™ 2004 55
Figure 16: RIOs organized for sequencing 56
Figure 17: An additional RLO created from *What are Barriers to Communication* RIO .57
Figure 18: Parts of the Content Package.....65
Figure 19: A media Asset (i.e., a .swf) that has reuse potential to be considered an RO .....214 ~~212~~
Figure 20: Asset (graphic).....215 ~~213~~
Figure 21: Asset (graphic).....215 ~~212~~
Figure 22: Asset (graphic).....215 ~~212~~
Figure 23: Gratuitous/Incidental Asset (decorative graphic) .....215 ~~212~~

Table of Tables

Table 1: SCORMTM Concepts and Definitions 4
Table 2: Designer/Developer Qualification Requirements 15
Table 3. Types of Assessments and Purposes.....25
Table 4. Learning Outcomes and Assessment Types 28
Table 5: EOs Identified For One Lesson Of The Apprentice Trainer Course.....34
Table 6: RLOs with Associative RIOs for the Apprentice Trainer Course 42
Table 7: NROM Instructional Metadata to be Written and Assigned by the Instructional Designer 45
Table 8: Instructional Metadata for the Apprentice Trainer Course 48
Table 9: Summary of Sequencing Examples and Models 59
Table 10: NROM Metadata Overview 61
Table 11: General Content Design Style Guidelines.....71

PART ONE: THE NAVY ILE AND THE NROM

The following sections briefly describe the vision, mission, and goals of the NAVY Integrated Learning Environment (ILE) and the role that the Navy Reusable Object Model (NROM) has within the Navy ILE. Additionally, the concepts of interoperability, reuse, repurpose, and reference (R^3) are introduced. Finally, the relationship between NROM and the Advance Distributed Learning (ADL) Shareable Content Object Reference Model (SCORM™) is discussed.

1.0 INTRODUCTION

1.1. Purpose Statement

The document serves as the first step in understanding the Navy Reusable Object Model (NROM) for the development of Navy Integrated Learning Environment (ILE) content. The initial rules and guidelines listed in this document represent a starting point in the process of the NROM development. This document is not the final set of rules and guidelines and will be modified as feedback is received. The document will be used to develop Navy ILE content that adheres to both the Navy ILE vision and mission and the NROM.

1.2. The Relationship between the Navy ILE and NROM

Any content within the Navy ILE must be designed and developed in support of the ILE vision, goals, and objectives and must be in accordance with the rules and guidelines set forth by the ILE NROM, adhering to the Shareable Content Object Model (SCORM™) 2004 standards, The following section will provide a brief overview of and explain the relationship between the Navy ILE and NROM.

1.3. Navy ILE Overview

1.3.1. Navy ILE Vision

To improve and support job performance and mission readiness by providing high quality learning and performance support available anytime and anywhere.

1.3.2. Navy ILE Mission

To analyze, define, develop, and implement human performance and learning alternatives, acquire products, and provide life cycle support per the vision, goals, and objectives of the Integrated Learning Environment.

1.3.3. Navy ILE Goals

- Develop requirements for methods, analyses, and tools to best implement performance-based learning.
- Develop methodology for connecting content with the applicable Naval Mission Essential Task Lists (NMETLs) and Job Task Analysis (JTA) source data
- Develop requirements and specifications for content design, development, and management.
- Develop business rules, workflow, and roles of personnel associated with the acquisition and development of products purchased by the Content Team.
- Identify needs and acquire ILE-specific training.
- Develop methodology for prioritizing content development.
- Identify and specify assessment requirements and associated techniques and strategies for testing performance.
- Develop metrics and methodology to measure effectiveness of the performance-based solutions and the resulting performance on the job.
- Review and evaluate internal processes, using the results of evaluations, to revise and update the methodologies, processes, and standards being implemented.
- Acquire performance-based interventions and conduct evaluations.

1.4. Task Force EXCEL (TFE)

Task Force Excellence through Commitment to Education and Learning (EXCEL) (TFE) is creating major cultural changes by focusing Navy learning on fleet mission requirements through the use of human performance measures—providing Sailors with the “tools and opportunities” to grow and develop, both professionally and personally, while improving mission accomplishment.

The Four Quadrant Human Performance System Model (HPSM) is the underlying human performance process by which TFE and partners are redefining Navy policies, structures, and mechanisms. For more information on HPSM, go to http://www.excel.navy.mil/human.htm.

The 5 Vector Model (5VM) defines the parameters around which a Sailor’s personal and professional development is designed. Eventually, the 5VM will change the promotion and detailing process. For more

information on the 5VM, go to http://www.excel.navy.mil/. The 5 Vectors are:

- Professional Development
- Personal Development
- Leadership
- Certifications & Qualifications
- Performance

1.5. Interoperability

A key characteristic of the Integrated Learning Environment (ILE) is to promote data interoperability among multiple communities and for multiple applications. Interoperability can be achieved by standardizing content development to optimize its potential for reuse, repurpose, and reference (R^3). The NROM helps to facilitate R^3 within the ILE.

1.6. Navy Reusable Object Model (NROM)

1.6.1. Reuse, Repurpose, and Reference (R3)

The development of the Reusable Object Model was fueled by the need to efficiently and effectively R^3 objects in order to create content for the Navy ILE. The following defines reuse, repurpose, and reference:

- Reuse—the use of an existing object in a new learning event without any modification to its instructional treatment, context, or content.
- Repurpose—the use of an existing object in a new learning event with modification to its instructional treatment, context, or content.
- Reference—the use of an existing object(s) as an information source or resource for generating ideas for new learning events.

Specifically, the NROM was devised to provide a data structure that would fulfill the following requirements:

- Interoperability to facilitate the R^3 of content items across multiple communities.
- The use of creative, sound, and effective Instructional Systems Design (ISD), and
- The application of various learning theories to facilitate performance-based learning and measurable outcomes.

The NROM fulfills these requirements by accommodating sound instructional designs and abiding by specific Extensible Markup Language (XML) and data design rules.

1.6.2. NROM and SCORM™

1.6.2.1. DoD and the Advanced Distributed Learning (ADL) SCORM™

The Sharable Content Object Reference Model (SCORM™) is part of a strategy called the Advanced Distributed Learning (ADL) initiative. The primary sponsors of the ADL initiative are the United States Department of Labor, Department of Defense (DoD), and the National Guard Bureau. The White House Office of Science and Technology Policy established the ADL initiative in 1997 to standardize and modernize the way in which training and education are delivered. The ADL initiative and SCORM™ seek to maximize technology-based learning to generate substantial costs savings. Government, academia, and private industry from around the world support ADL and SCORM™ initiatives. SCORM™ promotes efforts in four areas: reusability, durability, accessibility, and interoperability (see Table 1 ~~Table 1~~).

Table 1: SCORM™ Concepts and Definitions

SCORM™ Concept	Definition	Example
Reusable	Content is reused in a new context without any modification to its instructional treatment, context, or content, and is able to "stand-alone." It can be used across communities for many different learners.	Content about the hydraulic mechanisms of a turbine engine can be used across communities of practice within the Navy as well as other DoD entities.
Interoperable	Content will function in multiple applications, environments, and hardware and software configurations regardless of the tools used to create it and the platform on which it is delivered.	Content developed in a development software tool for delivery in a LMS will operate in any other SCORM™ -conformant LMS equally well.
Durable	Content does not require modification to operate as software systems and platforms are changed or upgraded.	Purchasing a new revision of a development software tool or upgrading the existing development tools will have no impact on the delivery of content to the learner.
Accessible	Content can be identified and located when it is needed and as it is needed to meet training and education requirements.	An Instructional Designer for contractor A can search a repository for content on turbine engines and identify the existing content available for her course, based on descriptive information about the content supplied by the original developer or content owner.

1.6.2.2. NROM and its Application to Learning Events

The ILE NROM acknowledges the SCORM™ concepts and definitions in Table 1 ~~Table1~~ and achieves R^3 within and across various communities of practice for the development of learning events with the use of Reusable Instructional Objects (RIOs) and Assets—which will be discussed in Section 2.0: The Navy Reusable Object Defined. This document specifically applies the NROM to the training community for the design and development of ILE content.

1.6.2.3. The SCORM™ and NROM Relationship

In order for the NROM to accommodate sound ISD, learning theories, and R^3, it must abide by specific Extensible Markup Language (XML) and data design rules. Technically, it is a data drill down that gives meaning to the Assets, Reusable Instructional Objects (RIOs), Reusable Learning Objects (RLOs) within the NROM hierarchy. The data drill down hierarchy of the NROM dictates that a:

- base RLO is the top-level grouping of related content containing RLOs and RIOs
- RLO is an aggregation of one or more RIOs.
- RIO is an aggregation of one or more Assets.
- Asset is a single media element or a single text element.

The NROM organizational structure is devised according to the requirements of XML and data systems logic. This logic is captured in the NROM XML model and allows for the storage and retrieval of content data by Content Management Systems (CMS) and Learning Management Systems (LMS). The integrity of the NROM content XML structures must be strictly maintained in order for the ILE to function.

The RLO is coded as an XML “container” element, as is a RIO. Container elements are formal, hierarchical designations devised for the sake of sound XML data design. The RLO and RIO elements hold no raw data. Only the Asset element holds raw data. Just as relational databases must follow strict rules of data design, so must the NROM.

In addition to following its own internal data organization rules, the NROM is directly tied to the rules and design principles embraced by ADL SCORM™ . A RIO equates to a Shareable Content Object (SCO) as defined in SCORM™ . A SCO is a launchable object for a course and must include Computer Managed Instruction (CMI) tracking for launch and completion.

The NROM builds on established SCORM™ principles and facilitate the implementation of SCORM™ 2004 . NROM is a SCORM™ -based standard that facilitates content organization and SCORM™ 2004 supported behaviors through advanced aggregations of content; these aggregations enhance R^3 capabilities by defining required and recommended meta-data data values and strategies as supported by the SCORM™

2004 CAM. By default, learning content delivered according to the NROM standard will be SCORM™ -compliant.

Content that has earned designation as "SCORM™ - compliant" has been designed, development, and validated according to the rules and regulations specific to ADL SCORM™ . Therefore, it is incumbent upon content developers who intend to design and deliver content according to SCORM™ and the emerging NROM specifications to gain a firm grasp of the fundamental principles and requirements set forth for SCORM™ compliant content within the ADL SCORM™ 2004 guidelines documentation.

While it is beyond the scope of this document to provide SCORM™ documentation for those who may not have such an understanding, these materials are available on the ADL SCORM™ Website, www.adlnet.org, and may be freely downloaded for review.

For developers unfamiliar with SCORM™ content design, the study of SCORM™ documentation is strongly recommended in order to gain a working knowledge of the concepts and requirements of the NROM model. We feel it is unlikely that an understanding of the NROM model can be achieved without first acquiring at least a nodding familiarity with the SCORM™ design and development guidelines serving as the NROM foundation.

While this document cannot provide an exhaustive account of the SCORM™ content design specification, it is possible to briefly review the fundamentals of SCORM™ content design in order to provide background and context for the ensuing NROM discussions. A brief review of SCORM™ Basics including SCORM™ Run-time environment (SCORM™ RTE), SCORM™ Content Aggregation Model (SCORM™ CAM) is included in Appendix B.

1.6.3. NROM Metadata

The purpose of meta-data is to provide a common nomenclature enabling learning resources to be described in a common way. Meta-data can be collected in catalogs, as well as directly packaged with the learning resource it describes. Learning resources that are described with meta-data can be systematically searched for and retrieved for use and reuse. (ADL, 2004, p. CAM-4-4)

In order to catalogue and search for objects (i.e., Assets, RIOs, and RLOs) within the repository SCORM™ LOM XML metadata must be applied to these objects. XML Metadata can be defined as:

- Descriptive information about an object for “purposes of description, administration, legal requirements, technical functionality, use and usage, and preservation (Getty).” Metadata is designed to help locate, organize, access, and use objects effectively.
- NROM uses the SCORM™ /IMS Packaging and its LOM specification as its content and configuration model. Figure 1 ~~Figure1~~ depicts this relationship.

SCORM™		NROM
- Root Aggregation	●→	- base Reusable Learning Object (base RLO)
▪ Aggregation	●→	▪ Reusable Learning Object (RLO)
▪ Sharable Content Object (RIO)	●→	▪ Reusable Instructional Object (RIO)
▪ Asset (with metadata)	●→	▪ Asset

Figure 1: SCORM™ and NROM Hierarchies

SCORM™ /IMS Packaging and its LOM are a specific form of metadata. Within the SCORM™ /IMS Packaging model there are essentially two types of metadata documents:

1. Manifest document—The manifest document supplies the content references and organization of an amalgamation of content objects.
2. Learning Object Metadata (LOM)—Supplies descriptive information concerning the nature of specific learning objects.

The SCORM™ notion of a learning object embraces individual media files as well as amalgamations of content into hierarchical structures. For more information, reference the SCORM™ /IMS Packaging specification at www.adlnet.org.

LOM metadata is delivered as a collection of XML files. LOM files are then ingested into a content repository that provides users access to search, retrieve, reuse, repurpose, and reference objects.

Within the NROM, metadata tags are required at the Asset, RIO, and RLO levels. However, some Assets do not require metadata. Appendix C provides the NROM metadata requirements that are specific to the Navy ILE NROM. All content that is created for the Navy ILE **must** be compliant with the Navy ILE NROM metadata requirements (see Appendix C). **NOTE:** to achieve the goals of the ILE, the developer must work closely with the instructional designer (ID) to properly and consistently identify/label the tags, particularly those within the educational category.

1.6.4. Repository

A content repository is a data storage facility for content and content metadata. The configuration of the Navy's ILE content repository is still under development. The Navy's ILE NROM is designed to harness the repository and R^3 concepts and allows for the

- reuse of objects contained within the repository,
- repurpose of objects contained within the repository (this can also include the use of raw data),
- development of new objects created from raw data, and

- reliable presentational rendering of content by a compliant LMS or LCMS according to the intentions of content designers and developers.

2.0 THE NAVY REUSABLE OBJECT MODEL DEFINED

Technically, the NROM is a data drill down that gives meaning to the base Reusable Learning Object (base RLO), RLO, Reusable Instructional Object (RIO), and the Asset that make up the NROM hierarchy (see Figure 2). The NROM seamlessly correlates to the SCORM™ . The NROM's hierarchical objects are defined as:

- **base Reusable Learning Object (base RLO)—**top level grouping of related content; the base RLO is also called the organization that contains RLOs and RIOs
  - **Reusable Learning Object (RLO)—**an aggregation of 1 or more or RIOs, it typically satisfies one terminal objective and correlates to SCORM™ 's aggregation
    - **Reusable Instructional Object (RIO)—**an aggregation of 1 or more Assets, it typically satisfies one enabling objective and correlates to SCORM™ 's SCO
      - **Asset—**the base building block of RLOs, it is either a representation of text or a media element (e.g., web file, assessment object, video, and other data elements)

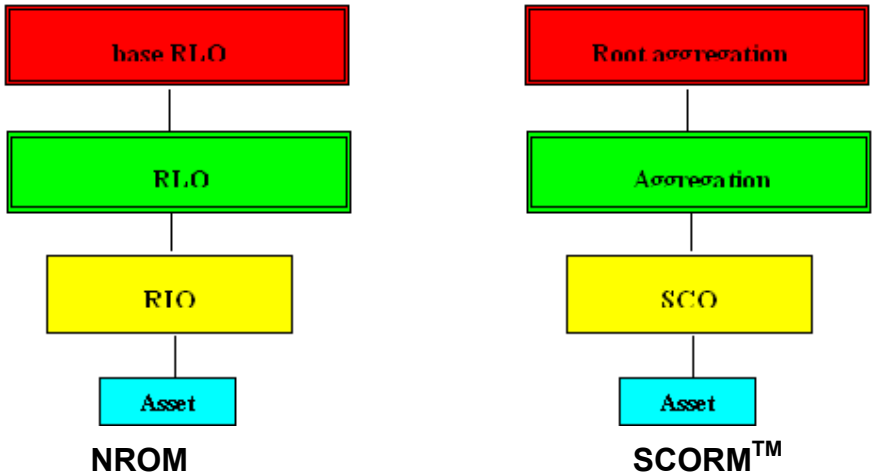

Figure 2: NROM Hierarchy vs. SCORM™ Hierarchy

Enabling Objective (EO): An enabling objective is directly related to a terminal objective. "It *enables* the learner to master part of a terminal objective" (Rothwell & Kazanas, 1992, p. 258).

Terminal Objective (TO): A terminal objective is what the learner will be expected to accomplish when they have completed a course of instruction, made up of enabling objectives (Dick & Carey, 1996)

It is important to understand the one to one relationship between SCORM™ and NROM. A SCO (RIO), an aggregation (RLO), or a base RLO could represent any number of "traditional" instructional design components such as lessons, modules, units, segments, or courses (Carnegie Mellon University, 2003). In Figure 3 the red boxes represent the base RLO which correlate to SCORM™ root aggregations—these are the highest levels of groupings. The green boxes represent RLOs, which correlate to SCORM™ aggregations—these are the lower level groupings. The yellow boxes represent a RIO, which correlate to a SCO within SCORM™ . The turquoise boxes represent the combination of one or more Assets contained within a RIO (SCO).

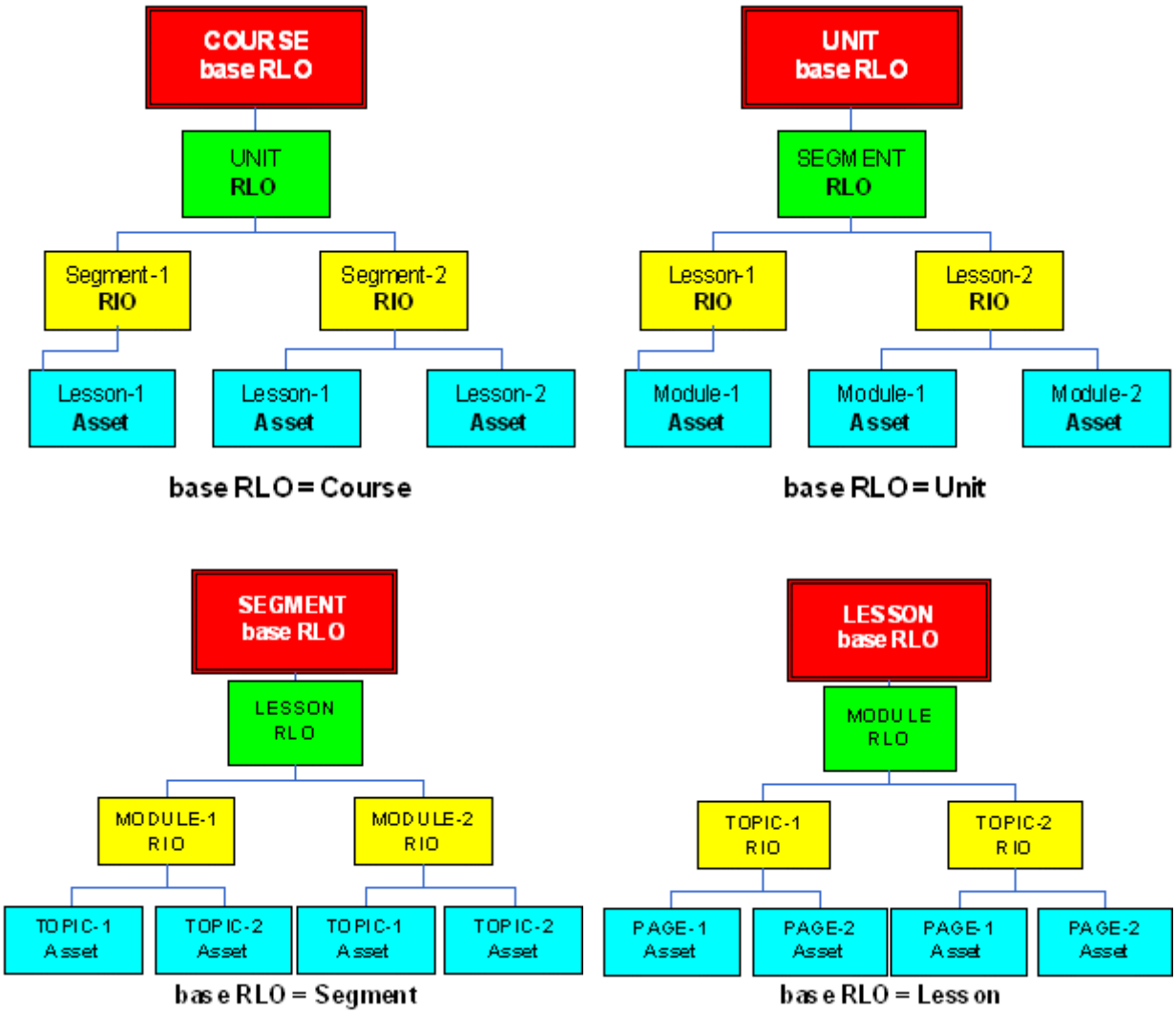

Repurposed with Permission: Copyright 2003, Carnegie Mellon University

Figure 3: NROM RLOs

The following sections will discuss the NROM, beginning with the smallest unit, the Asset, to the largest unit, the RLO.

2.1. Asset

Within and across communities of practice, the Asset is defined as any digital resource that can be repetitively used across different environments, for different purposes, having different end users (McGee 2003; Wiley, 2002). In general, the Asset enables reuse of data within and across communities of practice.

Within the NROM, the Asset (see Figure 4 ~~Figure4~~) is the object that has reuse potential across applications and across communities of practice. These applications can be for instructional purposes (i.e., as presented in the NROM) or for technical publication, simulation, electronic support systems, or other information dissemination purposes.

An Asset (see Figure 4 ~~Figure4~~) is the smallest unit within the NROM. An asset:

- is any media type—text, graphic, sound, animation, video, web page, assessment object, or other data piece that can be delivered to a web client.
- is the base building block of RLOs (e.g., content, technical publications, instructor/student guides, etc.).
- has reuse potential in many applications across various communities of practice.
- requires metadata if it is an image, sound, or animation.
- appears within a RIO.

Figure 4: Asset

In order for a single Asset to be reused, repurposed, or referenced (R^3), it must have metadata so that it can be searched and found. Assets assigned with metadata descriptions have greater R^3 potential as they may be returned as distinct, individual items by a specific search. **Within the NROM, all Assets that are non-gratuitous media type files—text, graphics, images, sounds, animation, video, etc. require metadata**.

Some Assets do not have metadata[1]. If metadata is not attached, the single Asset cannot be included in a specific search constructed to return single Assets. However, if the intent is to R^3a higher aggregation of assets (i.e., RIO, RLO), then any Asset within the aggregation has R^3 potential.

2.2. Reusable Instructional Object (RIO)

A RIO is the smallest piece of instruction delivered and tracked by an LMS—it is inherently instructional (see Figure 5 ~~Figure5~~). A RIO is a collection of Assets that include instructional treatment and are designed to present learning events.

A RIO:

- is a collection of one or more Assets.
- represents an independent piece of instruction.
- typically satisfies a single enabling objective.
- cannot directly access another RIO—cannot contain links to another RIO.
- has reuse potential across applications within the training community.

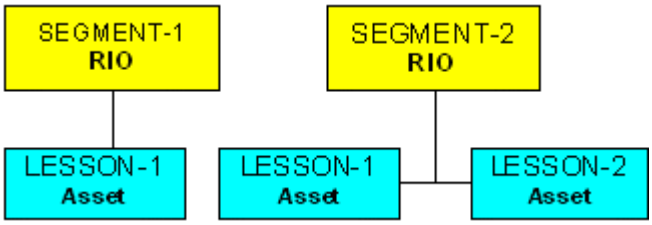

Figure 5: Reusable Instructional Objects (RIOs)

Figure 5 depicts RIOs as lessons. However, RIOs can be used to depict various instructional components—a lesson, a module, a unit, a scenario, an assessment, or a course. The ways that RIOs are used will depend upon the way the instruction and learner navigation is designed and structured as well as how the learner is tracked.

Within the NROM, a RIO is an independent stand-alone unit of instruction that typically satisfies one enabling objective. Since the NROM facilitates R^3 and adheres to the SCORM™ standard, a RIO must be small enough to accommodate R^3, address a single enabling objective, and contain all of the related materials to support its enabling objective. Remember, the LMS can only track at the RIO level and not any smaller units inside the RIO. In order to track an enabling objective, each enabling objective must be a distinct RIO. Hence, assessments can either be contained within a

[1]Gratuitous media type files that have little to no reuse value would not necessarily require metadata. For example, Assets such as a graphical space bar, graphical text, or a "Next" button would not necessarily require metadata. However, Assets assigned with metadata descriptions (e.g., content specific information or graphics representing content) have greater R^3 potential as they may be returned as distinct, individual items by a specific search.

RIO or can be created as an individual RIO. The level at which you design the assessment and how you want it tracked will determine if the assessment is contained within a RIO or is a distinct RIO.

2.3. Reusable Learning Object (RLO)

Within the instructional design community at large, a reusable learning object is defined as:

> Any digital resource that can be reused to support learning. The term "learning objects" generally applies to educational materials designed and created in small chunks for the purpose of maximizing the number of learning situations in which the resource can be utilized. (Wiley, 2002, p.1)

Within the NROM an RLO allows for the aggregation of RIOs and RLOs to build a specific learning event (see Figure 6 ~~Figure6~~). The NROM adapts the Carnegie Mellon (2003) definition of an aggregation to describe aggregations within the NROM:

> An aggregation is a parent and its children in a tree structure. Aggregations are used to group related content (i.e., Assets, RIOs, and RLOs) so that it can be delivered to the learner in the manner prescribed by the instructional design. SCORM™ sequencing rules allow you to prescribe the behaviors and functionality of the content (RIO) within the aggregation (RLO) as well as how the aggregation (RLO) relates to other aggregations (RLOs) within the same root aggregation (base RLO).

A base RLO is the top-level grouping of related content; the base RLO is also called the organization.

A RLO:

- is used as the highest level of aggregation—this is an **base RLO**.
- is used to aggregate RIOs—this is simply a RLO.
- typically satisfies a single terminal objective.
- has reuse potential across applications within the training community.

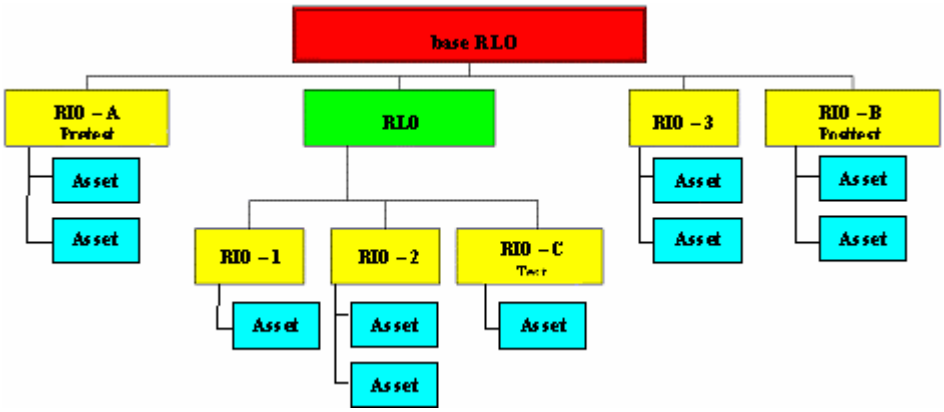

Figure 6: Reusable Learning Objects (RLOs) as aggregations

Within the ILE, a learning event is any learning opportunity—formal or informal—that has a specific intended learning outcome. It is translated in the NROM as an aggregated unit of instruction that fulfills either an enabling or a terminal objective. A RLO can be both an aggregation and a root aggregation. In Figure 4, the red box depicts the base RLO (root aggregation) that fulfills a terminal objective of the entire learning event. The green box depicts a RLO (aggregation) that fulfills a terminal objective for the lower level learning event. Each yellow box is a RIO that fulfills a single enabling objective or serves as an assessment.

PART TWO: APPLICATION OF THE NROM

The following two sections: 3.0 Designing for the ILE and 4.0 Production for the ILE focus on the application of NROM for developing learning events. Designing for the ILE deals with the design of ILE content and Production for the ILE addresses ILE content development. Optimizing the benefits of NROM to design effective instructional materials requires that designers and developers work closely together throughout the process. Such collaborative efforts can ensure that the development of ILE content adheres to the NROM guidelines and will function in a SCORM™ -compliant Learning Management System (LMS) as the instructional designer (ID) intended. It is recommended that designers and developers review both of these sections.

3.0 DESIGNING FOR THE ILE

Understanding SCORM™ and the NROM is only the first step in developing content acceptable for meeting the Navy ILE's vision, mission, and goals. Understanding the science of learning sufficiently to design effective learner-centric instruction is also required. Most important is acknowledging that instructional designers (IDs) must depart from old models that focused almost exclusively on information display, chunking, and sequencing. It is imperative that IDs employ models that use a combination of learning principles having the intent to very specifically lead the learner to the desired operational environment performance. The following sections present designer qualifications, various principles that IDs should consider in their design, and the major steps in preparation for production of ILE materials.

3.1. Designer/Developer Qualifications to Develop ILE NROM Content

Note that the human performance parameters and goals mentioned as central to the Navy's Revolution in Training are equally applicable to those developing learning events. The majority of the labor categories required for development of learning events are not essentially changed from those required in previous content development efforts except for the application of the following additional requirements:

- SCORM™ 2004
- Americans with Disabilities Act, Section 508
- The NROM presented in this document

However, the qualifications for the IDs are more stringent. The principles that must be applied to achieve the ILE goals go beyond just good information display, requiring a solid understanding of the science of learning. The following table provides basic requirements for government and contractor personnel. It is organized around the NROM with different levels of expertise required at each point in the hierarchy. At the Asset level, validated subject matter expertise is what is required to ensure the right

content is properly presented. At the RIO level, it is important that the designer/developer understands instructional principles because it is at this point that instructional treatment is applied. At the RLO level, designers/developers must be able to develop overarching designs that are carried out through the RIO level. They also must be able to ensure that this is accomplished. The instructional design qualifications required for development using NROM are presented in the following table.

Table 2: Designer/Developer Qualification Requirements

Reusable Learning Object Element	Skill Sets Required	
	Government	**Contractor**
• Reusable Learning Object (RLO)	Typically Masters or Doctorate in behavioral sciences w/ ISD experience or Instructor Delivery Continuum (IDC) Master Trainer *	Masters in behavioral/learning sciences such as instructional design, curriculum and instruction, educational psychology, adult education, etc. with at least 15 semester hours in fields related to education (such as educational psychology, learning theory, curriculum design and development, tests and measurement, etc.) and two years ISD development experience in performance-based training programs. Experience designing within SCORM™ and Section 508 compliant environments. Ten years of experience can be substituted for a Masters degree.
• Reusable Instructional Object (RIO)	IDC Journeyman Content Development Specialty*	Bachelors in behavioral /learning sciences such as instructional design, curriculum and instruction, educational psychology, adult education, etc. with at least one course in learning theory. 5 years of experience in developing performance-based training can be substituted for a bachelor's degree.
• Asset (A)	IDC Apprentice with validated expertise in subject matter	Validated expertise in subject matter

* Currently under design and development

Because the NROM is a SCORM™ -based standard, it is essential that IDs and content developers have a solid basic understanding of SCORM™ RTE, SCORM™ CAM, and SCORM™ SN specifications.

3.1.1. What Designers Should Know About the SCORM™ RTE

The programmatic nuts-and-bolts of the SCORM™ RTE may be of little use or interest to most IDs. However, knowledge of the prescribed methods for the aggregation and configuration of content as SCOs (i.e., RIOs within the NROM) to satisfy the technical requirements of the SCORM™ RTE is critical to achieving both SCORM™ compliance and effective instruction within SCORM™ boundaries.

3.1.2. What Designers Should Know About the SCORM™ CAM

The SCORM™ CAM is the heart and soul of all SCORM™ issues. It defines the how-to and why of SCO organizations (i.e., RIOs organizations in the NROM). Without this knowledge, it is virtually impossible to manage content design in accordance with SCORM™ requirements. IDs do not need to know the extensive catalog of possible XML attributes within the LOM specification, there are, however, certain required metadata elements and data values that must be applied as prescribed in order to achieve compliance within the SCORM™ and the NROM specifications.

3.1.3. What Designers Should Know About SCORM™ SN

The SCORM™ Sequencing and Navigation (SN) book (ADL, 2004) describes how SCORM™ -conformant content may be sequenced to the learner through a set of learner or system-initiated navigation events. The branching and flow of that content may be described by a predefined set of activities. The SCORM™ SN book describes how sequencing information can be applied to define various sequencing strategies; how sequencing information is interpreted at run-time to make sequencing evaluations; and how navigation requests, triggered through a learner's interactions with content objects, are processed to identify the next content object for delivery (launch).

It is not necessary for IDs to know how sequencing information is interpreted at run-time to make sequencing evaluations, but it is necessary for IDs to understand the rules regarding SCORM™ sequencing and navigation so that their instructional organization, structure, and navigation is SCORM™ compliant and will work in a SCORM™ environment.

3.1.4. SCORM™ Resources for Instructional Designers (IDs)

For complete and explicit information on implementation of the SCORM™ CAM, the SCORM™ RTE, and the SCORM™ SN IDs and developers should consult the ADL Web site www.adlnet.org to download and review The SCORM™ Implementation Guide (IG): A Step by Step Approach. The SCORM™ IG is written specifically for IDs responsible for SCORM™ implementations. The SCORM™ IG document is available in PDF format on the ADL Website via the ADL Resource Center. It can be found within the "SCORM™ " pull-down menu under the heading "Guidelines."

Additionally, IDs and content developers should consult the Carnegie Mellon Learning Systems Architecture Lab

http://www.lsal.cmu.edu/lsal/expertise/projects/developersguide/ to download the *SCORM™ Best Practices Guide for Content Developers*. Specifically, IDs and content developers should completely read and understand this guide prior to beginning the ISD process. This will allow IDs and content developers to design and develop content using many different sequencing options that are compliant with the SCORM™ 2004 standards.

3.1.5. Understanding NROM and SCORM™ Prior to Beginning the ISD Process

Because the NROM is a SCORM™ -based standard it is essential that IDs and content developers have a solid understanding of SCORM™ RTE, CAM, and SN before they begin any ISD process. Hence, this NROM document and the aforementioned SCORM™ resources should be read in their entirety before beginning the design and development process for ILE content. After reading and digesting this NROM document and the identified SCORM™ resources, IDs and content developers can then move forward with the ISD processes—beginning with the gathering of information from analyses.

3.2. Analysis

All good designs begin with a quality analysis. Contracted IDs and developers of ILE content will be supplied this information by the government in the form of GFI/M (government furnished information/material).

The Navy will conduct analyses, which involve occupational and human performance analyses to identify the tasks, sub tasks, knowledge, skills, abilities, tools, performance standards, and instructional learning objectives related to a specific job. (Appendix D) provides an example of how the JTA information delineates the skills objects, tasks, and subtasks of a workspace trainer.) In addition, the analysis data will include other essential information for the ID to fully understand the performance requirements of the learner. It will include information such as:

- identification and characteristics of the content,
- target audience characteristics,
- instructor characteristics,
- infrastructure (resources and processes), and
- learning environment (organizational culture and the larger training continuum).

With this information in hand, the design phase of development can begin.

3.2.1. Media Analysis

Under development

3.2.2. Organizational Analysis

Under development

3.2.3. Environmental Analysis

Under development

3.3. Costing

Under development

3.4. Instructional Design

Before the first Asset is developed, RIOs identified, and RLOs aggregated the instructional strategy(s) must be identified and the instructional design must be completed. The inputs from the analysis are considered in conjunction with instructional design theories to formulate the most effective and efficient instructional strategy and design.

One of the greatest impacts to your instructional strategy and design will be sequencing, discussed in section 4.2 Content Sequencing. Once you determine what type of instructional and assessment strategies you will employ in your design, you should consult with a developer/programmer immediately to decide if and how you can implement them using sequencing.

3.4.1. Reusable Learning Objects and Instructional Design

In some reusable object models, it is the model that drives how the ID must design instruction (e.g., see Barritt & Alderman, 2004) rather than sound instructional design theories. In these models, templates are often provided for constructing reusable objects, forcing limited design options on the ID. This approach diminishes the power of applying instructional design theories and ultimately decreases the effectiveness and efficiency of training. In contrast, the NROM was designed to accommodate any instructional design theory for the construction of reusable learning objects, while also taking into consideration the constraints dictated by the current technical standards. This approach is the key to a reusable learning object strategy that is not only instructionally sound, but also provides a return on investment that is expected of such a model.

The concept of the reusable learning object frequently has been likened to LEGOs . All the instructional parts are considered interchangeable, fit neatly together, and make impressive and creative structures. This analogy does not implicitly consider the application of sound instructional design and learning theories to the creation of reusable learning objects. While chunks of information can go together in such a way, good instruction does not. Instructional objects are not dynamically interchangeable, rarely fit together well as is, and when attempted, the results are rarely impressive

inherent instruction. However, it does require an individual who is adequately equipped with the proper knowledge of learning and ISD to ensure the effective reuse, repurpose, and reference (R^3) of instructional objects.

Wiley (2001) considers reusable learning objects from an ID's perspective and likens it to atomic bonding to create a crystal structure. In Wiley's analogy, he describes the sub atomic structure of the atom affecting how that atom can combine with other atoms to form the crystal. Just any atoms can't be joined to create crystals, the structure of each atom governs whether and how it can combine with other atoms. Understanding all the relevant theories and principles governing how atoms combine requires concentrated study in that science. "It should be obvious that a person without an understanding of instructional design has no more hope of successfully combining learning objects into instruction than a person without an understanding of chemistry has of successfully forming a crystal" (Wiley, 2001, p. 20). Combining instructional objects into coherent, instructionally sound learning events requires a sound understanding of learning and how to manipulate instructional environments to achieve the quality and type of learning that leads the desired job performance.

The NROM adopts the philosophy that instructional design is much more than ordering information or activities. Deliberate decisions must be made to determine how a learner will interact with the information. Each instructional piece (and the environment in which it will be used) has its own characteristics that impact how other instructional pieces interact with it. For learning to take place, learners must be mentally engaged with the content and do so in a way that is consistent with job performance. Learners must process the information, and get feedback on what they are learning. Portraying information, on the other hand, is much simpler and is not the same as providing instruction.

The definition of learning is no longer limited to a change in behavior as was thought for many years. Research in the psychological sciences has given rise to cognitive learning theory. The definition of learning has expanded to include a change in the learner's knowledge structures (Woolfolk, 1998). Learning requires the learner to "actively construct new knowledge by integrating data from the environment with existing knowledge in long-term memory. Instructional methods must support this process" (Clark, 2002, p. 14). We cannot simply present learners with information and expect them to learn. IDs must uphold the core goals central to the ILE and build in instructional strategies that engage learners in processing information to help them transfer it to performance on the job. This is essential to the goals of the Navy's ILE.

Instructional design theory provides guidance for designing an appropriate learning environment that enables learners to meet the instructional goals and objectives (Merrill, 1997). There are many considerations when designing instruction including an understanding of the learning system and the performance goals of the learning solution. Often an eclectic approach that applies multiple theories and multiple architectures are necessary to achieve the goals of instruction. This section cannot possibly provide an ID all the theories and principles governing the creation of

instruction. This section does, however, present some widely accepted theories for an ID to consider.

No design theory or method should be followed blindly without asking how this decision affects learning and if it will affect learning in the desired way. For example, Gagne, Briggs and Wager (1988) describe nine events of instruction. The ID should consider each event in the context of the learning solution being designed. The ID might want to consider how to gain the learners attention, inform the learner of the objective, stimulate recall of relevant learning, etc.; however, this process may or may not include every event in every learning object.

Unlike many learning object construction documents, templates for combining learning objects will not be provided in this document because the instructional design drives the instructional solution and templates are not necessary. However, sound guidelines, best practices, and examples are provided to ensure development consistency and promote reusability of objects.

3.4.2. Learning Objectives

Most instructional design models begin with the development of learning objectives based on a job-task analysis to ensure that the knowledge, skills and abilities being developed are job related. Objectives must be carefully written because all other instructional decisions will likely hinge on the learning objectives. However, care must be taken not to over rely on objectives. The assumption is that these objectives are concise and on target. Relying on a single verb in a learning objective to create an entire lesson often results in inappropriate instruction. The intent of the objective must be understood, particularly the context in which it is meant. Also, inexperienced IDs may write an objective merely to enable creation of a test question, allowing testing of the objective. The result is instruction focused on information to pass a test. While in many cases, this is necessary and acceptable; oftentimes the focus remains on the information rather than on job performance. And job performance is ultimately the basis for learning events created for the Navy ILE.

The instructional strategy is selected based on the objectives and their intent (assuming they are on target and based on job performance requirements). The ID will first identify an overarching instructional strategy for the course (e.g., cognitive apprenticeship), and then identify the specific instructional methods that support the overall strategy (e.g. shadowing a subject matter expert (SME), interviewing to determine the SME approach to a problem, and demonstrating a SME problem solving approach.) The overarching instructional strategy sets the “tone” of the instructional solution and affects all other design decisions. Identifying the appropriate strategy requires many considerations including job information requirements, cognitive skill requirements, performance, and learner characteristics. The final instructional design is likely to be a blending of strategies and methods to accomplish the performance goals.

Higher order learning objectives can present unique challenges to an ID. Not only are they difficult to design for, but also recognizing their underlying importance to job performance can be difficult when information is the focus of instruction. However, Navy ILE instruction will be learner-centered and performance-based and instruction created for the ILE must include these objectives. Activities promoting higher order thinking skills (e.g., problem solving, analysis, synthesis, and evaluation) can also be used to develop the lower levels of learning. For example, learners with good metacognitive skills may benefit from a problem centered learning design within a framework where students work together using resources and perhaps even experiments to solve the problem. This audience can learn the foundational knowledge required for solving the problem and at the same time hone their problem solving skills.

No matter what instructional strategy you employ or delivery medium you use, your content will only be as effective as the learning objectives you write. Ensure that you spend adequate time, in advance of the technical implementation, determining the types of objectives you want to use for your content, the granularity of each objective you write, and the conditions and standards your objectives include. This will later impact your content organization, identification of RIOs, and the aggregation of RIOs into RLOs.

3.4.3. Instructional Design Theories and Approaches

This document is not designed to teach learning theory or instructional design to the novice. However, we have provided a brief overview and examples of instructional design theories and approaches in Appendix E. This reference is not meant to be a step-by-step guide for designing effective instruction. The examples of instructional theory and approaches provided here are only samples of what can be found in the literature (see Jonassen, 2004 and Reigeluth, 1999). Their inclusion in this document is not meant to imply that instructional designs must be based on one of these theories. It is hoped that this description of sample theories will enable the ID to recognize the importance of basing a design on an instructional design theory or theories, consider the many possibilities at their disposal, recognize that each theory implies certain activities and approaches to instructional design, and that alone, or in combination, these theories can lead to learner-centered designs. The ID must be purposeful in their instructional design and having a theory on which to base decisions makes the design defendable

3.4.4. Integrating Metacognitive Strategies

Being competent in any field requires both domain-specific knowledge and good metacognitive skills to manage that knowledge (Clark & Wittrock, 2000). Metacognition is the process of monitoring and controlling our cognitive processes, or the process of thinking about thinking (Schwarts & Perfect, 2002). Successful students are aware of their learning, monitor their understanding, and select appropriate activities to ensure they achieve their learning goals. Clark (2003) describes students with good metacognitive skills as those who plan study activities effectively, assess their strengths

and weaknesses accurately, focus their time and effort on the right things, and use good study techniques. Students who learn successful learning strategies generally perform better than those who don't (Pressley & Ghatala, 1990).

Clark (2003) contends that good metacognitive skills are more important for success in a self-directed learning environment than in an instructor-led classroom. In the ILE environment, students will engage in self-managing activities like managing their time for learning and studying, selecting lessons and learning activities, determining the order in which they complete lessons and activities, and deciding when they have learned enough to pass a performance test. Learners in the ILE environment will need to develop good metacognitive skills. Clark (2003) identified activities for learners to succeed in a learning environment like the ILE:

- Set goals and timelines
- Manage time for studying
- Determine the best way to meet the set goals
- Monitor progress toward the set goals
- Determine when and how to make adjustments as progress towards goals is monitored

There is a wide range of learners who will participate in the ILE environment. Many will have good metacognitive skills and many will have poor skills. Novices to a particular field generally don't make good learning decisions (e.g., whether to skip an exercise or not) and it is important that the ID builds in tools to help learners make good decisions (e.g., pre-tests) and develop effective metacognitive skills (Clark, 2003). By embedding metacognitive strategies and tools into the instructional design of courses being offered through the ILE, students will learn to be successful independent learners.

Appendix F provides specific design methods for promoting metacognitive skills and learner control.

3.5. Legacy Content

Content organization for legacy content is discussed in this document. But further articulation of the following topics

3.5.1. Maintenance and Management

Under development

3.5.2. Processes

Under development

3.5.3. Transition Plan

Under development

3.6. Assessment Strategy

3.6.1. General Assessment Strategy

Assessment: Assessment, in its broadest use, describes the processes and tools designed to solicit data from learners to make inferences about what they know or can do.

The assessment strategy documented in the IMDP is integral to the overall instructional design. Refer to Appendix G: Characteristics of Good Assessment Practices, presents general guidelines for assessment development and highlights best practices. It is intended to serve as a guide for IDs as they select instructional design models and make decisions concerning instructional and assessment strategies.

Assessments make inferences regarding what learners know or can do. These inferences can be used to make decisions about (a) students, (b) curricula and programs, and (c) educational policy (Nitko, 2004; Pelligrino, Chudowsky, & Glaser, 2001). Within the context of ILE, the term, Assessment, will be used with measurement of the learner and performance. The term, Evaluation, will address measure of effectiveness of curricula, programs, or policy. Despite the various contexts for assessment, one common principle is that assessment always relies on the process of reasoning from evidence (Pelligrino, Chudowsky, & Glaser, 2001). Decisions about assessment (e.g., what questions to ask, what tasks must be performed) all seek to provide sufficient evidence that a learner has achieved the intended outcome.

Assessment plays a critical role in the design and development of learning events and instruction. As previously stated in this document, most instructional design models begin with the development of learning objectives or descriptions of intended learning outcomes. At the time the learning objectives and outcomes are developed, the ID must decide how the learner will demonstrate attainment of each objective or outcome. Assessment provides the means for making that determination. Decisions about what to assess and how to assess should not be afterthoughts. Although assessments often take place after instruction has been completed, the development of assessments should be part of the initial design process (Pellegrino, Chudowsky, & Glaser, 2001).

The goal of innovative items, however, should be to improve the ability to assess learner knowledge or skill not to showcase technology (Parshall, Spray, Kalohn, & Davey, 2002).

The ID must consider many factors, including the intended purpose of the assessment, the target audience, and the content. These factors will influence the specifications for each assessment, including the format and medium. Just as new technologies offer opportunities for learners to interact with content, they also offer opportunities to demonstrate understanding or skills in new ways. Assessment items need not be limited to multiple-choice questions, but should include responses to simulations, concept

maps and open-ended questions. Innovative items can provide high levels of task complexity and interactivity while also reducing the likelihood of guessing.

3.6.2. Assessment Design Decisions

During the planning stages, the ID is faced with several decisions affecting assessments. This section raises several key questions to be considered.

3.6.2.1. What is the intended purpose?

Assessments serve multiple purposes. Assessment instruments can diagnose learner strengths and weaknesses, prescribe sequencing or alternatives, measure prerequisite knowledge, provide feedback on progress, assign rankings, measure performance, or certify mastery.

The purpose of an assessment should be identified during planning and design of instruction. The same items can be used to assess student understanding for various purposes. A simple way to illustrate the different purposes is to examine when assessment is given and the types of inferences that can be made based on the learner's performance. Separate types of assessments can be designed for different purposes (e.g., diagnosing student strengths, certification). The same assessment items can be used for different purposes but the reporting (e.g., to the learner, to the instructor) and the inferences made will differ (Baker, Aschbacher, Niemi, & Sato, 1992).

Table 3, Types of Assessments and Purposes, provides a summary of basic purposes for assessment and typical inferences made from each type of assessment.

Table 3. Types of Assessments and Purposes

When Administered	Purpose	Typical Examples	Typical inferences based on performance
• Prior to instruction	• Prescriptive or Diagnostic	• Pretest	• Has the student already achieved the intended learning outcomes? • Does the student have the prerequisite skills needed to begin the instruction?
• During Instruction	• Formative Progress	• Embedded question, • Practice test • Self-assessment • Quiz • Module/Lesson Test	• Is the student achieving the intended outcome? • Is remediation needed? • Where/when should remediation occur?
• After Instruction is completed	• Performance Measure	• Posttest • Exams • PQS Board	• To what extent has the student achieved the learning outcomes? • Has the student met the expected standard? (criterion-referenced) • How does the student rank relative to others? (norm-referenced) • Has a learning intervention been effective?

* Table 3. Adapted from N. E. Gronlund, "Characteristics of Four Types of Achievement Tests." *How to construct achievement tests*, 1988, p. 16.

3.6.2.2. To What Standard Is Student Performance Compared?

An assessment plan also provides information about the standards to which learner performance will be compared. To demonstrate attainment of the learning outcome, must a student correctly answer 80% of the questions on a test? Must a learner accurately describe each of steps that must be taken to secure a site? What actions must a learner take to satisfy PQS tasks?

The standard is often set as a specific score or number correct on a test. Determining the accuracy of a multiple choice or matching item is typically straight forward and evidenced when the learner selects what is coded as the correct response. Determining

the standard for an open-ended question or performance task requires the development of rubrics. A rubric may be a checklist or a specific breakdown of points to be awarded for each element included or the quality of the response. The National Center for Research on Evaluation, Standards, and Student Testing (CRESST) has developed scales to evaluate student understanding of essay questions. Their scoring rubric illustrates how point values can be allocated for various components of learner responses, including use of concepts and facts, avoidance of major misconceptions, and the quality of the argument presented. (Baker, Aschbacher, Niemi, & Sato, 1992).

3.6.2.3. What Evidence Demonstrates Attainment of Intended Performance/Learning Outcome?

Will the student demonstrate knowledge by answering questions or by applying knowledge in a real-world or simulated setting with performance observed by experts? The assessment plan identifies the knowledge and behaviors (e.g., cognitive, psychomotor, affective; verbal, intellectual) that must be attained and which indicators will best demonstrate attainment of the intended outcomes. An assessment may be a single item (e.g., a question or task) or it may be a collection of items (questions, tasks, performance on a simulation). Jonassen and Tessmer (1996) provide an extensive listing of outcomes and ways to assess them.

3.6.3. Assessment Items and Assessment Instruments

The term assessment often refers to the actual instrument or test designed to obtain information, whether a written test for determining what a student knows or a performance test requiring a student to demonstrate skills. For consistency and simplicity in this document we will distinguish between terms as follows:

3.6.3.1. Assessment Items

Each individual question or task we ask the student to address is an assessment item. This item can stand alone within the instructional design of the course (e.g., a knowledge- or self-check during instruction or a question to test mastery at the end of the course). Assessment items can be developed in a various formats, including closed-choice (e.g., multiple choice, matching) open-ended (e.g., fill-in, essay), and real or simulated performance tasks. See Table 4, Learning Outcomes and Assessment Types, for suggestions.

3.6.3.2. Assessment Instruments

Assessment instrument refers to items that are grouped together to form tests, quizzes, exams, or simulations. The designer must distinguish between recorded and unrecorded assessment instruments. Recorded instruments will be scored and reports will be sent to an LMS. Unrecorded assessment instruments (typically self-checks or

self-assessments) will provide feedback to the learner only and scores will not be reported.

3.6.4. Aligned with Learning Outcomes

Current learning science research includes assessment as one of the important elements affecting how people learn. Based on the How People Learn (HPL) reports, Bransford (2001) describes assessment as one of the lenses through which environments should be analyzed to facilitate learning. Using assessments in this manner means more than frequent testing. Learning environments should “provide multiple opportunities to make learners’ thinking visible, provide them with feedback and offer opportunities for them to revise and learn about their own learning” (Bransford, 2001, p, 1). Feedback and the opportunity to learn from it foster the development of metacognitive as well as cognitive and performance skills. Decisions about the kind of feedback and when it should be given must be made during the design phases.

The intended learning outcome should drive decisions relating to the instructional strategy and the assessment strategy. For example, if the learner is expected to solve ill-structured problems, the instructional strategy should facilitate development of those skills. The assessment strategy should provide opportunities for the learner to demonstrate attainment of those skills. An assessment instrument might ask the learner to act as a first responder to a chemical disaster, solve the complex problem of determining the number of helicopters needed for a mission given specified conditions, or create a concept map to describe the policy ramifications of an action. If the learner is expected to evaluate resources and select appropriate information, the assessment may be dynamic in order to provide varied resources. If the learner is expected to respond with appropriate air traffic control commands when given certain cues, instructional strategies should provide strategies and practice for developing rapid responses. Likewise, the assessment strategy should require precise and rapid responses. Assessments may also include hands-on tasks that are not computer driven. Table 4, Learning Outcomes and Assessment Types, identifies several types of assessments that can be used to assess learning outcomes.

Table 4. Learning Outcomes and Assessment Types

LEARNING OUTCOMES	ASSESSMENT TYPES
Cognitive/Knowledge	• PQS • Practicum • Oral Board • Scenario • Simulation • Reporting • Writing Sample • Essay • Sample Work Product • Knowledge Check • Multiple Choice • True/False • Matching • Concept Mapping • Completion • Rank/Order (Sequencing) • Brief/Presentation
Psychomotor/ Task Performance	• Structured On-Demand Task • Projects • Portfolios/Jacket • Experiment • Oral Presentation • Simulation • Scenario • Demonstration • Checklist • PQS • Rating Scale • Observation (demonstration, simulation, workplace)
Affective/Attitude	• Questionnaire • Observation • Simulation • Scenario • Moral Dilemmas • Reflective Writing • Presentation

3.6.5. Feedback

Feedback is an important element in the learning process. The assessment strategy should include opportunities for learners to learn from their performance. In guidelines for developing good assessments, the Advanced Distributed Learning (ADL) states that tests given during instruction should provide feedback and motivation to the learner. Information obtained should indicate the degree to which the learner is achieving the intended skills, subskills, and content domains (Advanced Distributed Learning, 2003). Research further suggests that learners benefit by receiving feedback on their performance, guidance about how to improve, and training in self-assessment (Pellegrino, Chudowsky, & Glaser, 2001).

3.6.6. Remediation

Assessment results can identify knowledge or performance gaps in need of remediation. The ID determines the type of remediation the learner will receive and the methodology. Remediation in the ILE may (a) direct the learner to additional instructional materials or learning experiences; (b) instruct the learner to repeat certain portions of instruction; or c) suggest equivalent or alternative methods of learning. These distinctions have direct implications for content organization and content sequencing

3.6.7. Aggregating Assessments

The NROM addresses issues related to the SCORM™ Content Aggregation Model (CAM). SCORM™ does not handle assessment issues via the CAM specification. At high levels of planning, however, IDs do consider how assessment content (i.e., assessment instruments) will be aggregated and sequenced. Therefore, this section provides high level guidance to IDs concerning options for aggregating and sequencing assessment instruments (e.g., how to plan for pretests or remediation).

Many of the functions of testing are addressed through the Run-time Environment (RTE) of SCORM™ . These include assessment behaviors, data tracking, item analysis, and random selection of test questions from item banks. These are issues that must be addressed within the context of the content runtime programming, the LMS environment and perhaps the LCMS.

The IMS Question & Test Interoperability (QTI) specification V1.2 (IMS Global Consortium, Inc, 2000) describes a basic structure for the representation of question (item) and test (assessment) data and their corresponding reports for results. The IMS Question & Test Interoperability Specification provides proposed standard XML language for describing questions and tests. These include variations for text-based, audio-based, and image-based items.

> IMS/QTI issues cannot be addressed within NROM, however, because ADL SCORM 2004® currently offers no means to implement the

3.7. Content Organization and RIO Design within NROM

ID must organize the content once the instructional design is complete—to include selection of instructional, assessment, and remediation strategies, and identification of the delivery medium.

3.7.1. NROM Content and Instructional Integrity

Many IDs express concerns about reusability and context-free aspects of reusable objects and reusable object models such as SCORM™ content. IDs might wonder how to maintain the instructional integrity of reusable objects not knowing who precisely may use the reusable objects, when they might use them, or with what other materials it might be used.

One of the easiest ways to ensure the instructional integrity of NROM content is to make each RIO a stand-alone instructional unit. The NROM recommends that RIOs be developed as topics addressing a single learning objective, generally an enabling objective (EO). As such, RIOs are intended to be inherently small to facilitate reuse by persons other than the original developer. As an EO, the RIO should contain all of the materials and resources required to support the EO. Structured in this manner, the effective completion of the RIO will impart the knowledge or skill for which it was designed.

At times a RIO might be used to display information or encapsulate assessment. This RIO might not satisfy a single EO; however, it should support a greater enabling or terminal objective. It should address a single cohesive topic and contain all of the materials and resources required to support the topic.

Good content makes good NROM content, so the time you spend carefully analyzing desired outcomes and designing learning objectives may make the greatest difference in your ability to create “good” RIOs.

This section is designed to demonstrate a process for creating RIOs and identifying RLOs. The tips and techniques explained in this section will facilitate your development of NROM content that is SCORM™ -compliant, but through your own implementation, you will continue to learn more about the ways you can create RIOs using the NROM to produce ILE instructional materials that are SCORM™ -compliant.

Again, since RIOs are intended to be inherently small topics, objectives such as “employ strategies for enhancing your personal and professional development as a workspace trainer” will likely be too comprehensive to become a single RIO. In this case, you might want to consider a single terminal objective (RLO) for a lesson and develop smaller enabling objectives (RIOs) as topics to support the terminal objective. If RIOs are limited to a single, well-written enabling objective, then it is easier to make more of them context-neutral. Where context-specific instruction is required, such as for introductions, conclusions, and transitions, you can create context-specific objectives such as: “Differentiate between your roles and responsibilities as a workplace trainer

and as an apprentice trainer in the Instructor Delivery Contiuum (IDC)." Although, some of the content will be context-specific to the IDC, most of the content regarding roles and responsibilities of a workplace and apprentice trainer can still remain context-neutral, which will increase its R^3 potential.

3.7.1.1. Assets, RIOs, and Reusability

Reusability can and should occur at all levels of NROM, from Assets to RIOs to RLOs. The amount of reuse potential in each of those items varies. The most reusable components will usually be Assets, because they have the highest level of context independence.

A well-designed RIO should serve numerous audiences in achieving multiple outcomes, across many contexts, making it ideal for courses and uses in addition to the ones for which it was originally designed. A RIO may be any size, but RIOs are inherently small. They are not only reusable in more contexts than a traditional course, but are also easier to maintain and update, as content requires changes or customization. Since the RIO is stored in an LCMS and delivered via an LMS, it can also be configured in many different ways to meet many different needs.

This ability to reuse RIOs for many different purposes can generate significant time and cost savings and allow the Navy to better respond to its training needs. When you discover an education or training need, you can search the LCMS for existing instructional materials. You can then retrieve content created by different entities and configure or sequence the content to meet your learners' specific training needs. This "custom" course can then be delivered by a SCORM™ -compliant learning management system when it is needed ("just-in-time training") without waiting for weeks or months of development.

As discussed previously, you can reuse any number of NROM or SCORM™ components, from Assets to RIOs/SCOs to RLOs/aggregations of content. However, Assets are typically the most context independent items, so they will likely be the most reusable. RLOs/aggregations, courses, and curricula are your most context dependent items, so they may not be reused as often.

The diagram below shows how to structure/organize content in the NROM. Assets exist as stand-alone items. RIOs contain assets. RLOs are made up of RIOs. Base RLOs are made up of RLOs and RIOs. Curricula are created from collections of base RLOs.

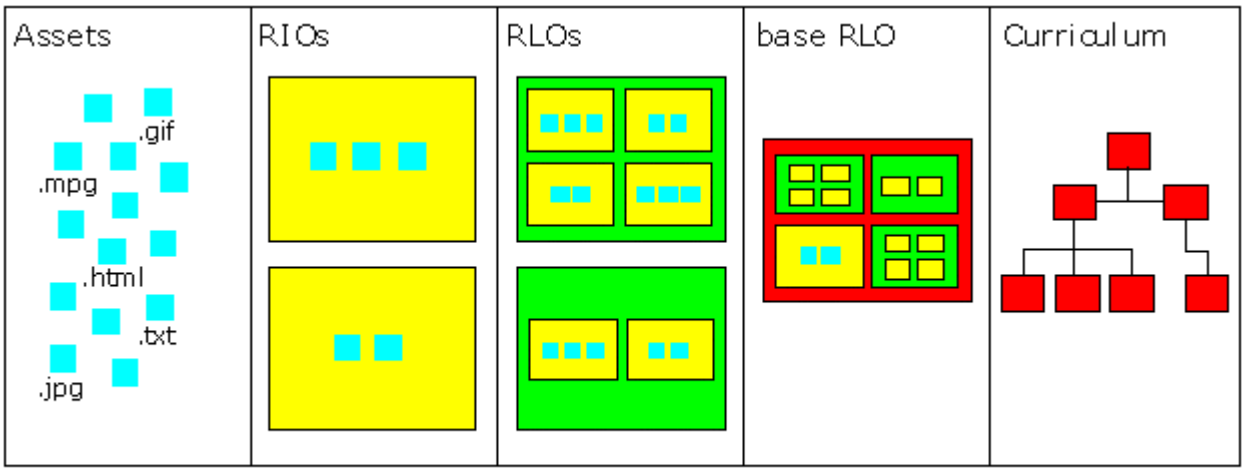

Repurposed with permission: © Copyright 2003, Carnegie Mellon University (based on work by Wayne Hodgins and Ellen Wagner of Learnativity.com)

Figure 7: NROM component reuse from Assets to curricula

To understand how much reusability you can expect from each level of your content, as well as how much context each level will have, consider Figure 8 ~~Figure8.~~ As you move from left to right (from Assets to Curriculum), the amount of reusability decreases with each level, but as you move from right to left (curriculum to Assets), the amount of context in each level decreases. Your job is to determine the best balance of reusability versus context when you create your RIOs. Remember, the smaller the NROM component, the more reusable it will be. The larger the component, the more context it will have.

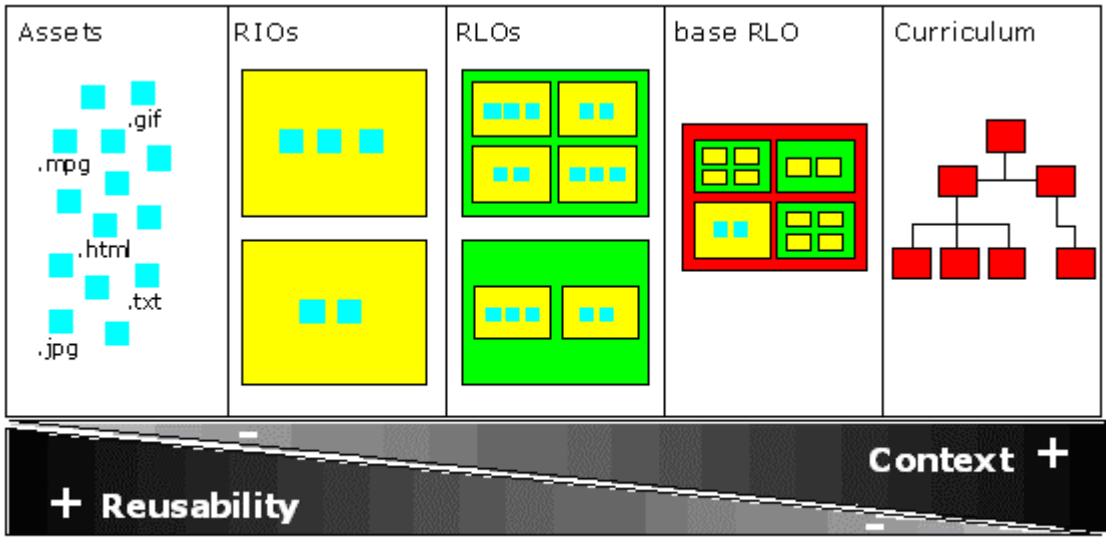

Repurposed with permission: © Copyright 2003, Carnegie Mellon University (based on work by Wayne Hodgins and Ellen Wagner of Learnativity.com)

Figure 8: Determining amount of reusability versus context across NROM components

For example, it is determined that IDC trainees need training on effective communication as do new Navy recruits. After assessing the performance issues and determining which objectives apply to the audiences identified, you search the repository or your company's database for existing RIOs.

Based on your search results, you decide to use existing RIOs found in the repository and in your company's own database for both the IDC training as well as the new recruit training. Since, the IDC trainees will need more in-depth training you decide to reuse several "effective communication" RIOs that you found. However, the new recruits only need an introductory lesson on effective communication so you will only use a few of the RIOs that you found. Two of the RIOs you found were used in both courses. This example illustrates the importance of reusability for the Navy ILE.

3.7.2. Designer Decisions

As discussed in previous sections of this document, content can be grouped or aggregated in various ways depending on factors to include goals of the course, characteristics of the intended audience, and the available resources. The ID must establish the organization of the course including:

- how the course will be organized
- content of the assessments and mapping of items to content
- process the learner will follow to access assessments, remediation, and course content
- what actions will be taken on completion of the assessment.

These decisions begin during the instructional design process and continue through the content development process. These decisions impact how RIOS are identified, developed, and aggregated into RLOs

3.7.3. Identifying and Designing RIOs—Overview

RIOs are the smallest logical unit of instruction delivered and tracked via a learning management system (LMS). One approach to consider for designing RIOs is to write them as a topic that addresses an EO. It will be up to the ID, involving SME input, to determine the appropriate objective wording, size, content, and structure for each RIO designed.

However, you must be somewhat flexible when designing your RIOs. At times, there may be a need make RIOs larger or smaller than an EO to meet the specific tracking needs of a project. For example, if you create a simulation where a learner will complete a Navy form and you want to track that the learner completed the form correctly, apart from any other instruction about the form, then you may want the simulation to comprise a single RIO. In another project, you may not have enough information about a particular subject matter to create several EOs, so it may be more effective for to create one slightly larger RIO that represents several EOs.

Additionally, since NROM is SCORM™ -based, just like SCOs cannot directly access other SCOs, RIOs cannot directly access other RIOs. Therefore, RIOs should not be created with any links to content in other RIOs. Put another way, this means a learner cannot access supplemental content from another RIO. *It is very important to remember that each RIO should be able to stand-alone.* This is significantly different from the way most Computer-Based Training (CBT) lessons and courses function.

A RIO must exist independent of other instruction, so it cannot rely on other RIOs or a particular course structure to give it meaning or place it within a certain context. For IDs, this may pose a concern—how do you ensure the instructional integrity of a RIO if there is no supporting course structure and you don't know the context in which it may be used?

If you use the general guideline of creating your RIOs as individual topics representing an EO and all of the related materials required to support that objective, the effective completion of the RIO will impart the knowledge or skill for which it was designed. As such, a RIO should be instructionally sound. *Remember, the LMS is only required to track at the level of the RIO, and not any smaller units inside it, so this will impact how you "size" your RIOs and contain assessment items within RIOs.*

3.7.4. Moving from a Traditional Course Structure to NROM

Traditional course structures tend to follow a hierarchical scheme with a course being composed of various lessons and each lesson being composed of topics. Each topic then has one or more objectives.

Table 5 ~~Table5~~ lists the enabling objectives (EOs) and the terminal objectives (TO) for one lesson of the Apprentice Trainer Course.

Table 5: EOs Identified For One Lesson Of The Apprentice Trainer Course

Lesson Title	Topic Outline	Objective	Objective level
Lesson: Becoming a Qualified Workspace Trainer		After completing this lesson, you will be able to employ strategies for enhancing your personal and professional development as a workspace trainer.	TO
	What is an IDC Apprentice? • Common elements of training programs, including terminology and basic approach at the command, department, and	Differentiate between your role and responsibilities as a workplace trainer and as an apprentice in the IDC.	EO

Lesson Title	Topic Outline	Objective	Objective level
	divisional levels. • Instructional Delivery Continuum • Apprentice Level • Practice Items • Activity: Analyze the Command Training Structure		
	What is Team Dimensional Training (TDT)? • Definition of TDT • The TDT Cycle • Practice Items	Describe the TDT cycle.	EO
	The Primary Trainer/Apprentice Relationship • Definition and example of a learning coach • Purpose of the apprentice/learning coach relationship • Benefits of the apprentice/learning coach relationship • Practice Items • Activity: Interview your primary trainer	Describe the primary trainer/apprentice relationship.	EO
	What is Self-assessment? • Recognizing what you know and don't know • Recognizing when you've done something wrong • Knowing when t ask for help • Practice Items • Activity: Assess your knowledge of IDC topics	Perform a self-assessment.	EO
	What is an Individual Development Plan (IDP)? • Definition of IDP • Purpose of IDP • Use of an IDP to manage professional	Use your IDP to manage your professional development.	EO

Lesson Title	Topic Outline	Objective	Objective level
	development, including tracking performance and setting goals • Practice Items • Activity: Develop and review your IDP		
	What is Time Management? • Procrastination • Setting priorities • Time management strategies • Benefits of time management • Setting goals • Practice Items	Describe time management	EO
	IDC Trainee Responsibilities • Take initiative for your own learning and ultimate qualification. • Seek out and interact with learning coach and peers • Utilize the tools and resources available • Take advantage of learning opportunities • Take the initiative to become technically proficient. • Practice Items	Describe your responsibilities as an IDC apprentice trainee	EO

Each topic may or may not have a learner assessment. Figure 9 ~~Figure9~~ hypothetically shows the Apprentice Trainer Course if it was designed as a “traditional” course. Assume this hypothetical “traditional” course was designed for Apprentice Trainees to give them detailed information about all aspects of becoming an Apprentice Trainer.

NOTE: The example below shows only two lessons and three topics for each lesson of the hypothetical “traditional” Apprentice Trainer Course.

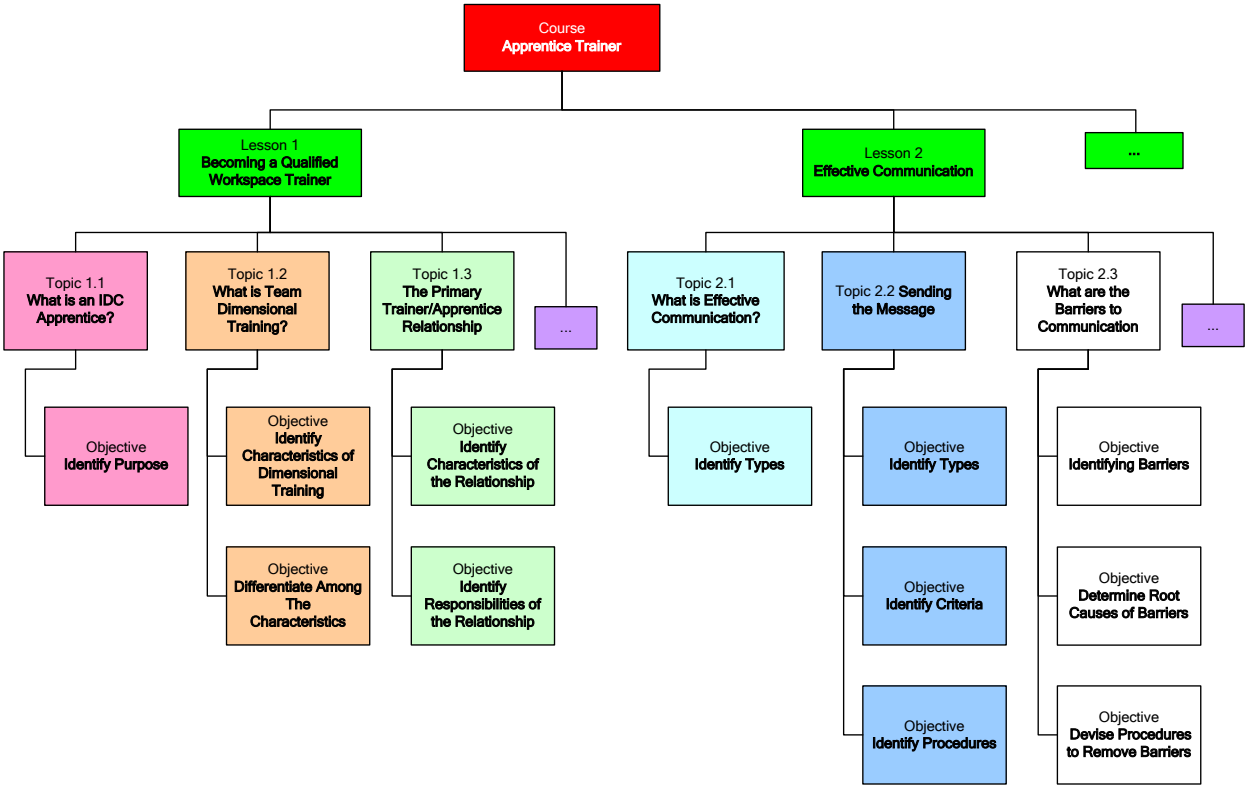

Repurposed with Permission © Copyright 2003, Carnegie Mellon University

Figure 9: Example of a traditional course content structure diagram

In Figure 9 ~~Figure9~~ there are three topics in each lesson, each represented by a different color scheme. In the format presented, assume that in order to pass the topic, the learner would have to complete the entire subordinate learning objectives. As structured, an Apprentice Trainee who wants to learn specific information about the characteristics of team dimensional training would have to complete, at a minimum, the entire lesson on *What is Team Dimensional Training?* to see information on *The Primary Trainer/Apprentice Relationship*. Likewise, if the trainee wanted to learn about *What are the Barriers to Communication?* she would have to see, at a minimum, both the entire What *is Effecting Communication?* and *Sending the Message*. This limits the ability of learners to access only the content they desire or the crucial objectives and limits the reusability of the instructional materials.

3.7.5. Designing RIOs from Existing Instructional Material

Navy training content exists that has been designed and delivered as instructor-led training (ILT). Most likely some of this content will be identified to convert to SCORM™ -compliant ILE materials using the NROM and this guide. The materials targeted to convert may or may not have been developed by you or your peers. They also may or may not have been developed by experienced IDs. It is possible that some of the content might be in a topical outline format or PowerPoint presentation format lacking significant details and substance. ILT instructors are able to spontaneously fill in the details, add substance, and adapt their style and content to meet the individual needs of their learners. In ILT, instructors are the sequencers.

When tasked with converting existing ILT to SCORM™-compliant NROM content, it is essential to ensure the content is instructionally sound in its current form before trying to convert it to either e-learning or NROM. The easiest way to do this is through the process of content "reverse engineering." Additional considerations for designing RIOs as new instructional materials are addressed in section 3.7.6 Designing RIOs for New ILE Instructional Materials.

3.7.5.1. Evaluate the Existing Content

Does the content teach its stated objectives? You may find, after thoughtful and unbiased evaluation, that the objectives are unrelated to the content, or the content does not teach the required objectives. If this occurs, you should determine which, if any, of the following you need to do:

Add content to teach the existing objectives.

Again, since most ILT is created as an outline where the details are filled in by the instructor, compelling ILE materials will require significantly more detail and careful construction of the content and consideration for the precise language and writing style used for the content. An instructor won't be available to clarify vague information, so the ILE materials must be thorough. Look carefully at the objectives and the content to determine whether it's the objective or the content that should drive the lesson. If the objective will drive the lesson, additional content is needed to ensure that the objectives are designed effectively.

Remove or rewrite the existing objectives.

Some IDs write objectives that are either so granular they cannot properly be addressed in any course, or they write objectives that are unrelated to the actual content the learner needs to know. Look carefully at the content and the objectives to determine the motivator for the lesson. If the content is the motivator for the lesson, then consider removing or rewriting the irrelevant objectives to better match the content. Make sure that you consult with the SMEs as well as any available GFI/M, and government point of

contacts (POCs) to discuss and gain approval to remove or rewrite any existing objectives.

Remove irrelevant content.

It is very easy to become distracted by interesting information when you are designing and authoring a course. Often irrelevant content is added to a course's required learning objectives because it is "nice to know." Ensure that the content in your ILE material is "need to know". Your learners will thank you for saving them time in the learning process. The Navy will thank you for saving them time and money in the development process, and most importantly, for avoiding the unnecessary costs. Make sure that you consult with the SMEs as well as any available GFI/M, and government point of contacts (POCs) to discuss and gain approval to remove what you have identified as irrelevant content.

Re-design the organization of the content.

Often the objectives for a course are well written and the content is clearly defined, but the organization of the content is questionable. If you have feedback or evaluations from past learners, review it to see what ideas they have about the presentation order of the content. Many times what seems like the most intuitive instructional approach to the designer is not the way learners understand or process a particular type of learning. Re-design or re-order the content before you try to break it into RIOs so the RIOs you produce will be ready to sequence.

For any of these options, there may be consequences that impact your schedule, budget, and resources. You should explain your particular situation with a course and your planned approach to resolving any problems with it to your management and the Navy POC before proceeding. If you are in the proposal process (proposing to complete the conversion of existing content to NROM), then consider the impacts of these issues in your costing model, as they may be significant.

3.7.5.2. Identify the RIOs

Once you've identified the target audience(s)—typically given to you in the GFI/M—you can begin to decide how the content should be "divided" into individual RIOs to make it optimally reusable while still meeting the needs of the audience for whom is was originally intended. When you look at your existing ILT materials, you may find one topic repeated throughout the course, lesson, or module. Determine if there is a better way to group the materials so that all aspects of one topic are presented together. In ILT, the instructor does all the sequencing and customization of the content as she presents it; in the Navy ILE, all the material needs to be thorough, accurate, well-designed, and well-written before it is presented to the learner, so think carefully about the best way to group, or regroup, what you already have. More often than not, you will be able to assume that you can maintain the existing structure of your content. If your content needs to be restructured, either for instructional reasons or to adhere to SCORM™ and

~~Designing RIOs for New ILE Instructional Materials~~

NROM, refer to section 3.7.6 Designing RIOs for New ILE Instructional Materials and 4.2 Content Sequencing before attempting to identify your RIOs. The content structure diagram you create may require modifications or unique RIO structures to achieve the instructional outcomes you desire.

Assume you are working with the hypothetical "traditional" Apprentice Trainer Course depicted in Figure9 ~~Figure 9.~~ Both SCORM™ and NROM say a RIO should be context neutral and should stand-alone. In order to accomplish this with the Apprentice Trainer Course, you could structure the content outside of the context of an Apprentice Trainer.

Content Structure Diagram

In this document, a content structure diagram is a tree diagram created by the instructional designer for the programmer to show the hierarchy onto which the sequencing rules for the RIOs are applied. This diagram should be followed by a list of the behaviors the instructional designer intends for the learner.

Figure10 ~~Figure 10~~ shows the individual objectives from the Apprentice Trainer Course (from Figure 9 ~~Figure9~~) divided into individual RIOs (yellow boxes), rather than created as comprehensive topics. These diagrams are not intended to show the structure of the content, but rather to show an example of dividing existing content and lessons into individual pieces that will become RIOs.

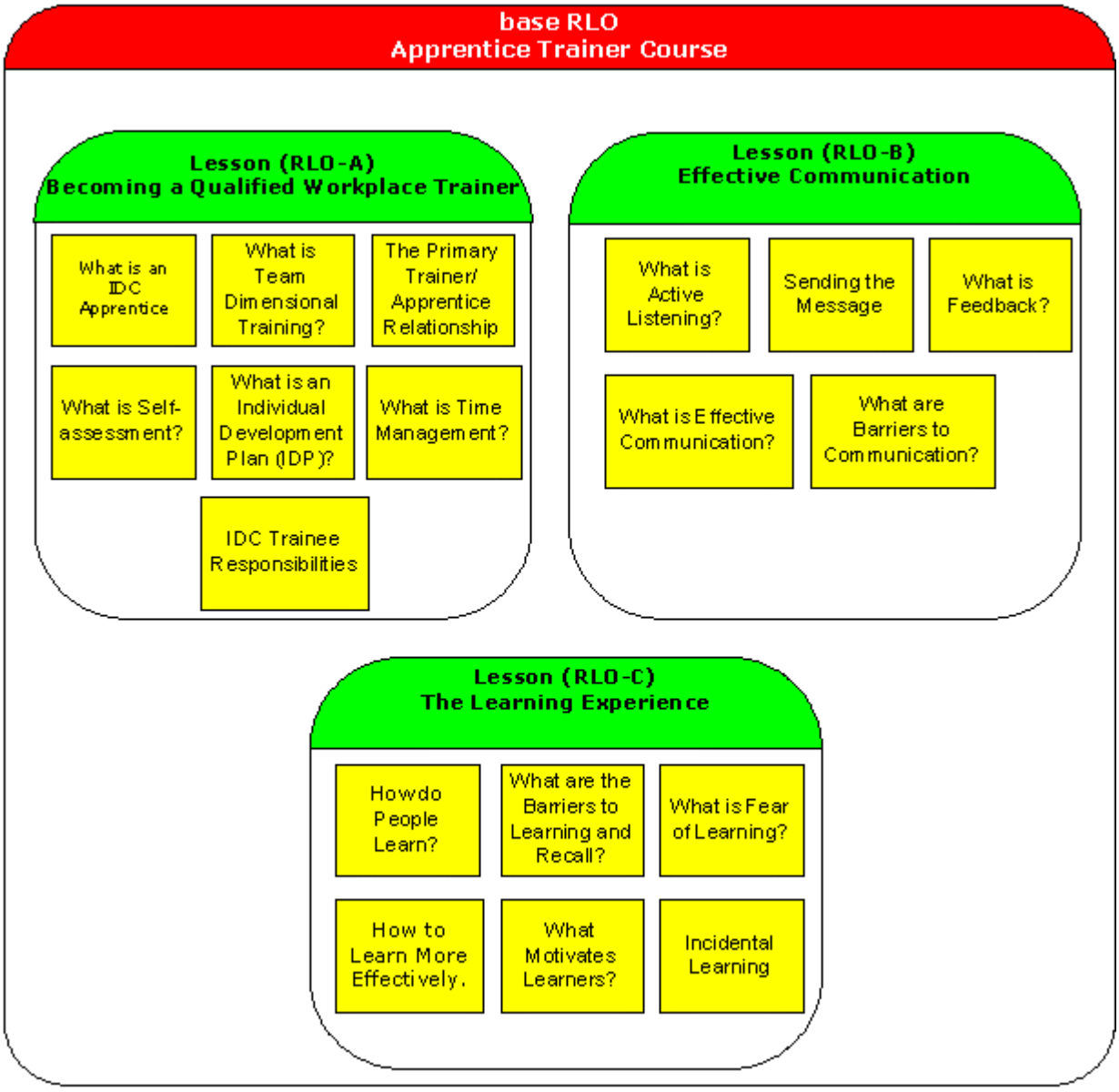

Repurposed with permission: © Copyright 2003, Carnegie Mellon University

Figure 10: RIOs created from the existing course depicted in Figure 9

In this format, some of your RIOs may be too large and the content too comprehensive to meet the needs of an audience Apprentice Trainees. For example, the RIO called *What is Effective Communication?* might include *What is effective Communication?* as well as instruction on *Sending the Message*, *What are Barriers to Communication?, What is active Listening?* and *What is Feedback?* These topics could possibly reach a wider and different audience across various communities of practice. Review the content very carefully to determine if they can be broken down into several other

enabling objectives. Often the topics covered in a RIO such as *What are Barriers to Communication?* can become enabling objectives that you could design as smaller RIOs, thereby making them more reusable.

3.7.5.3. Identify the RLOs

Each topic in each lesson of the Apprentice Trainer Course was identified as a RIO. As you can see in Figure 10 ~~Figure10~~ the RIOs identified to address the lesson objectives were grouped into three RLOs. The Apprentice Trainer Course actually has seven Lessons (Figure 9 ~~Figure9~~ , Figure 10 ~~Figure10~~ , and Table show only three of the seven lessons for example sake). Therefore, there would be seven RLOs for this course, each RLO containing multiple RIOs representing the lesson topics for the course (see Table for three of the seven lessons and their association to RLOs and RIOs). This example is just one way that the course could be organized.

Table 6: RLOs with Associative RIOs for the Apprentice Trainer Course

RLO	Lesson: Becoming a Qualified Workspace Trainer
RIO	• What is an IDC Apprentice?
RIO	• What is Team Dimensional Training?
RIO	• The Primary Trainer/Apprentice Relationship
RIO	• What is Self-assessment?
RIO	• What is an Individual Development Plan (IDP)?
RIO	• What is Time Management?
RIO	• IDC Trainee Responsibilities
RLO	Lesson: Effective Communication
RIO	• What is Effective Communication?
RIO	• Sending the Message
RIO	• What are barriers to communication?
RIO	• What is active listening?
RIO	• What is feedback?
RLO	Lesson: The Learning Experience
RIO	• How do people learn?
RIO	• What are the barriers to learning and recall?
RIO	• What is fear of learning?
RIO	• How to learn more effectively
RIO	• What motivates learners?
RIO	• Incidental learning

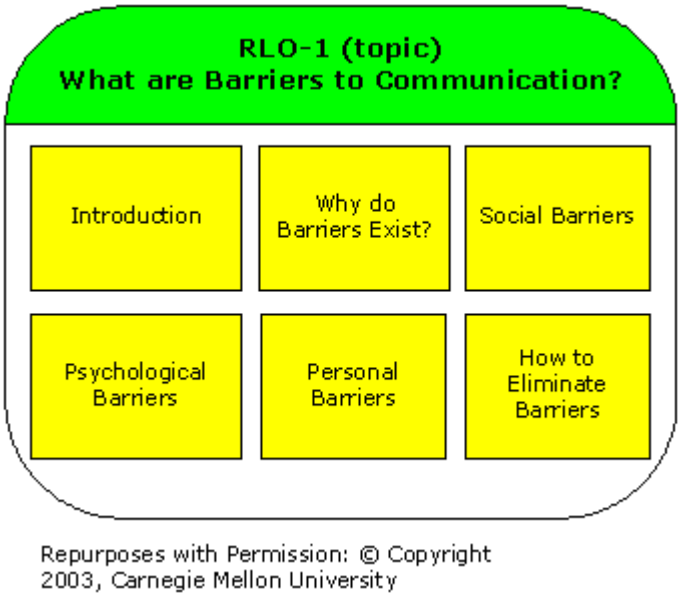

Figure 11: An additional RLO created from

Remember that the RIOs shown in Figure 10 ~~Figure10~~ and Table 6 ~~Table6~~ could become enabling objectives that you could design as smaller RIOs—aggregated into a RLO—thereby making them more reusable. It depends upon the instructional design intent and the amount of content. Assume the topic content in *What are Barriers to Communication?* (see Figure 10 ~~Figure10~~ and Table6 ~~Table6~~) does have numerous enabling objectives. Figure 11 ~~Figure11~~ shows how you could further divide that topic content into RIOs that correspond to the enabling objectives. Each RIO in the diagram represents one EO. The RIOs can now be sequenced in any manner desired by the instructional designer. Section 4.2 Content Sequencing, shows numerous ways you can structure the content from this example.

3.7.6. Designing RIOs for New ILE Instructional Materials

It may appear easier to design new ILE instructional materials in accordance with NROM rather than repurpose existing materials for NROM. However, the repurposing process has one advantage: you know the scope of the task since you already know what the content is, how deep the content delves into the subject matter, and how the content was intended to be structured. When designing new ILE content with the NROM, it will be very important to set some parameters for your design or development team.

When designing RIOs for new content, one of your first tasks discussed in section 3.0 Designing for the ILE was to determine what type of instructional strategy(s) to implement before identifying the individual RIOs. This important process must always be implemented before you identify and design any RIOs for new ILE content.

Once you've determined the instructional strategy you think is most relevant to your learners, you can decide how many RIOs you will need, what content the RIOs will address, etc. You can do this in a way that will make the individual RIOs optimally reusable while still meeting the needs of the audience for whom you are designing the material. Review the guidelines in section 3.7.5 Designing RIOs from Existing Instructional Material, for more considerations about identifying your RIOs, and then follow the remainder of the development process outlined in that section.

The designing RIO processes outlined here represent one example in which you can work through the instructional design process to create SCORM™ -compliant ILE instructional materials using the NROM. You can customize this process to best fit your own team's requirements.

3.8. Preparing for Production

3.8.1. Develop Instructional NROM Metadata

Once the ID has organized the content, "instructional" descriptive data (metadata) must be assigned to the objects—Assets, RIOs, and RLOs—that have been identified in the content organization. It is the ID's responsibility to *assign* the "instructional" metadata that is applicable to the content. Because the instructional metadata is based on the instructional strategies, design, and learning objectives, only the ID will know how to write the instructional metadata and what content is assigned the instructional metadata.

The NROM has predefined required instructional metadata that the ID will need to assign to the instructional content. As the ID, you might have a simple instructional metadata file in the form of a text document in which you would list the applicable instructional metadata for each NROM object—Asset, RIO, RLO—that you have identified. When you give the developer/programmer your instructional design files, you would also include the instructional metadata file.

Table 7 lists only the NROM metadata that the ID **must** develop. This metadata is specific to the instructional content. The ID will then pass the metadata to the developer/programmer so it can be coded. Complete NROM metadata, explanation, rules, and examples can be found in Appendix C. Please take the time to study Appendix C so that you are familiar with **ALL** required NROM metadata, rules and guidelines. In the table below "object" refers to Asset, RIO, and RLO. Rules and guidelines for the RLO also apply to the base RLO.

Table 7: NROM Instructional Metadata to be Written and Assigned by the Instructional Designer

Element	Explanation	NROM Level - Mandatory (M) - Optional (O)			Examples and Non-examples
		A	RIO	RLO	
1.0 General	**Describes the traits of an object.** ***Note:** This tag is Mandatory at the Asset level *only if* the Asset receives metadata and/or the Asset is tagged with any of the 5.0 or 9.0 parent/child elements.	**M***	**M**	**M**	**This is the summary level element. Complete the fields below.**
1.2 Title	The name given to the object.	**M***	**M**	**M**	See Appendix C
1.4 Description	Provides a description of the object and allows for a narrative explanation.	**M***	**M**	**M**	See Appendix C
1.5 Keyword	Used to define common keyword(s) or phrases that describe the object.	**M***	**M**	**M**	See Appendix C
5.0 Educational	**Describes the educational characteristics or the theories of the object.** ***Note: This tag** is **Mandatory** at the applicable NROM level ***only if*** it meets the definition of one of the Learning Resource Type's tokens.	**M***	**M***	**M***	**This is the summary level element. Complete the fields below.**
5.2 Learning Resource Type	Identifies the object's type. This tag is not free form. It allows for at least one or more token to be assigned. **At least one of the following tokens must be assigned *IF* the object meets the definition of the following tokens**: • exam • self assessment • scenario • practicum • simulation and game • other	**M***	**M***	**M***	See Appendix C
5.7 Typical Age	Identifies the level of	**M***	**M**	**M**	See Appendix C

Element	Explanation	NROM Level - Mandatory (M) - Optional (O)			Examples and Non-examples
		A	RIO	RLO	
Range	instruction/target audience for which the content was designed. Tokens include the following: • Apprentice • Journeyman • Master				
9.0 Classification	**Describes the placement of an object in a given classification system.** ***Note:** This tag is **Mandatory** at the applicable NROM level ***only if*** it meets the definition of one of the Purpose tokens.	**M***	***M**	***M**	**This is the summary level element. Complete the fields below.**
9.1 Purpose	The Purpose tag is used at applicable **RLO** or **RIO** level to identify the **Educational Objective—enabling, terminal**, and, at the **Asset**, **RIO**, or **RLO** level to identify the applicable **Skill level—skill object**, **task**, **subtask**. The following tokens are used: • educational objective: enabling • educational objective: terminal • skill level: skill object • skill level: task • skill level: subtask	**M***	***M**	***M**	See Appendix C
9.3 Description	The 9.3 tag is a **free form text field** used to **describe** the assigned 9.1 tokens: • educational objective: enabling • educational objective: terminal • skill level: skill object • skill level: task	**M***	***M**	***M**	See Appendix C

Element	Explanation	NROM Level - Mandatory (M) - Optional (O)			Examples and Non-examples
		A	RIO	RLO	
	• skill level: subtask				

For the Instructional Delivery Continuum (IDC) course an example of the instructional metadata that the ID is responsible to identify and write is listed in Table8 ~~Table8~~ . Note that this example is only a **partial listing** of the required instructional metadata. When you identify and write your instructional metadata you will have more metadata then what is shown in this example. For example, remember that in Figure 11 ~~Figure11~~ , the RLO contains numerous RIOS. You will have to analyze each of the RIOs and their associate Assets to identify and write metadata.

In the following example the first RLO listed entitled *Instructional Delivery Continuum* (IDC) lists the metadata for the entire IDC course. The RLOs entitled *Apprentice Trainer Course* and *Becoming a Qualified Workspace Trainer* and the RIO *What Is an Individual Development Plan (IDP)?* include a **partial** list of metadata for the examples used in this section.

Table 8: Instructional Metadata for the Apprentice Trainer Course

Level	Title	Metadata
RLO	Instructional Delivery Continuum (IDC)	**1.2 Title** Instructional Delivery Continuum (IDC) **1.4 Description** The IDC is part of the Navy's commitment to increase the effectiveness of on-the-job training (OJT) by providing train-the-trainer professional development in the operational environment. **1.5 Keyword** IDC, OJT, trainer, professional development **5.7 Typical Age Range** Apprentice **9.1 Purpose** educational objective: terminal **9.3 Description (educational objective)** Increase the effectiveness of all Navy training **9.1 Purpose** Skill level: Skill object **9.3 Description (skill level)** Skill level: Skill object—IDC training
RLO	Apprentice Trainer	**1.2 Title** Apprentice Trainer **1.4 Description** The Apprentice Trainer course is the first phase in the IDC. Trainees learn and apply training concepts and principles within their actual assigned workspaces. This will be accomplished with guidance and assistance from an assigned primary trainer, who will act as both a mentor and evaluator of the trainee's progress. **1.5 Keyword** Apprentice, trainer, training principles **5.7 Typical Age Range**

Level	Title	Metadata
		Apprentice **9.1 Purpose** educational objective: terminal **9.3 Description** Enhance workspace trainer skills. Prepare individuals for journeyman training. Develop an interest in becoming a high-caliber professional career trainer **9.1 Purpose** skill level: skill object skill level: task **9.3 Description (skill level)** skill level: skill object—IDC training, workspace training administration skill level: task—request billets for mobile and in-house classes
RLO	Becoming A Qualified Workspace Trainer	**1.2 Title** Becoming A Qualified Workspace Trainer **1.4 Description** Students will learn skills to assess their knowledge of OJT procedures. They will also be introduced to, and build, an Individual Development Plan (IDP) that will allow them to develop personally and professionally during involvement in the IDC and throughout their Navy career. **1.5 Keyword** OJT, IDP, personal development, professional development **5.7 Typical Age Range** Apprentice **9.1 Purpose** educational objective: terminal **9.3 Description** After completing this lesson, you will be able to employ strategies for enhancing your personal and professional

Level	Title	Metadata
		development as a workspace trainer. **9.1 Purpose** skill level: skill object skill level: task **9.3 Description (skill level)** skill level: skill object—IDC training, workspace training administration skill level: task—maintain training records for student accountability
RIO	What Is an Individual Development Plan (IDP)?	**1.2 Title** What Is an IDP? **1.4 Description** A critical part of professional development is applying what is learned during self-assessment in an Individual Development Plan (IDP). Students will use the IDP to determine their course of action to complete the IDC program. **1.5 Keyword** IDP, self-assessment **5.2 Learning Resource Type** scenario self-assessment **5.7 Typical Age Range** Apprentice **9.1 Purpose** educational objective: enabling **9.3 Description** After completing this topic, you will be able to use your IDP to manage your professional development. **9.1 Purpose** skill level: skill object

Level	Title	Metadata
		skill level: subtask **9.3 Description (skill level)** skill level: skill object—IDC training, IDP training skill level: subtask—utilize IDP to manage professional development goals

3.8.2. Communicating the Instructional Design

IDs must make decisions about when learners will access instruction and assessments and what kind of feedback and remediation they will receive. After the IDs have designed their content organization and applied their instructional NROM metadata they must sequence their content. This will require careful and clear communication with the developers and programmers. However, it is the ID's responsibility to write clear instruction as to how the learner is to navigate through the instruction, assessments, and remediation BEFORE they begin their sequencing. During the sequencing the ID will write the behaviors of each RIO, RLO, base RLO, and remediation so that the programmer can translate the behaviors into SCORM™ functions. The ID, developer, and the programmer must work collaboratively in order to successfully achieve this task.

3.8.2.1. Delivery of RIOs to the Learner

In SCORM™ 1.2, an LMS takes the table of contents in the content package and presents that to the learner. The learner is then able to choose any SCO (RIO) they want to see. The instructional designer has no way to control which SCO the learner sees, or in what order the SCOs (RIOs) are seen. *Remember that the NROM is based on SCORM™ 2004 and not SCORM™ 1.2.*

In SCORM™ 1.2, an ID can add rules to the table of contents to force the learner to see RIOs in a particular order. Instructional designers can also apply prerequisites to RIOs to ensure that a learner knows some particular information or completes a particular RIO before moving on to another subject or RIO. Rules can also be added that will force learners to remediate to different RIOs when they are having trouble with a particular RIO.

The ability to apply these standardized rules in SCORM™ 2004 and in the NROM is called sequencing. Sequencing is addressed in detail in section 4.2 Content Sequencing. Sequencing rules are very complex and require an instructional designer to work with a programmer to determine the correct set of rules needed to obtain the desired behavior and delivery structure.

4.0 PRODUCTION FOR THE ILE

The NROM provides the flexibility to design instructionally sound and effective performance-based ILE learning events that meet the specific needs of the target audience. Once the instructional design is complete (including the organization of the content, selection of instructional and assessment strategies, and delivery platform the design must be sequenced. It is important that the intent of the instructional design follows through during production and that in the process of production the intent of the instructional design is not compromised. Hence, in order to ensure the success of Navy ILE learning events it is imperative that the ID collaboratively works with the developer/programmer during the production processes to ensure that the instructional design is properly interpreted.

4.1. Applying the SCORM™ API to NROM

Content inside a RIO can be highly customized to a particular learner by using the SCORM™ Application Programming Interface (API) provided by an LMS. For example, a RIO can use the API to get the learner's name and insert it into the text so a learner might see "Welcome to the Apprentice Trainer Course, Malika" when she logs in. A RIO can also use the API to determine if the learner has seen a particular assessment RIO before and how she scored on previous attempts. Based on this information, the LMS could then present different materials to the learner or deliver a different test.

The most common use of the API is to record a learner's score on a test in a RIO and then record if the RIO was passed. The LMS stores all this information for use later in the course and for the learner's supervisor to see how well the learner did in the course. The API is the only way to track a learner's progress in a course delivered via an LMS.

The ID, developer, and the programmer must work closely together to ensure that the IDs design intent regarding the content organization, learner's navigation, and access to content is correctly interpreted in the production process. It is the programmer's responsibility to implement the API to achieve the intent of the instructional design. It is also the programmer's responsibility to educate the ID regarding what is allowed and not allowed according to SCORM™ and the API specifications. Working together they can produce effective and efficient ILE materials.

4.2. Content Sequencing

Because the NROM is a SCORM™ 2004 -based model and development of all ILE content must adhere to both NROM and SCORM™ , the following discussion references the SCORM™ 2004 sequencing rules and guidelines. It is important to remember the one-to-one correlation that NROM has with SCORM™ 2004 (see Figure 12 ~~Figure12~~). Hence, within this section the terms SCO and RIO, aggregation and RLO, and root aggregation and base RLO are used interchangeably.

SCORM™		NROM
- Root Aggregation	●→	- Base Reusable Learning Object (base RLO)
▪ Aggregation	●→	▪ Reusable Learning Object (RLO)
▪ Sharable Content Object (SCO)	●→	▪ Reusable Instructional Object (RIO)
▪ Asset (with metadata)	●→	▪ Asset

Figure 12: SCORM™ and NROM Hierarchies

In traditional multimedia and CBT, branching enabled (or sometimes forced) learners to move from one piece of content to another relatively seamlessly. Learners may or may not have known they were moving from one lesson to another or from one module to another. This was possible because robust authoring systems gave IDs nearly limitless programming options for structuring and branching their content.

The sequencing functionality within a lesson or between lessons, shown within the yellow box in Figure 13, was hard-coded, whether based on a linear or an adaptive model. Figure 13 ~~Figure13~~

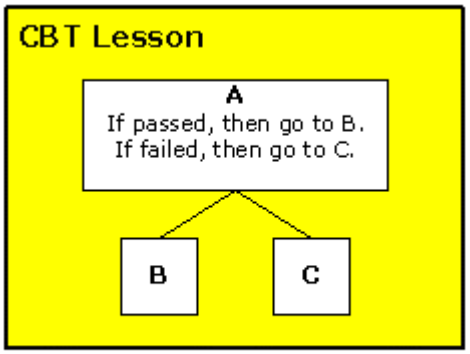

© Copyright 2003, Carnegie Mellon University, Some Rights Reserved

Figure 13: Sequencing in CBT lessons

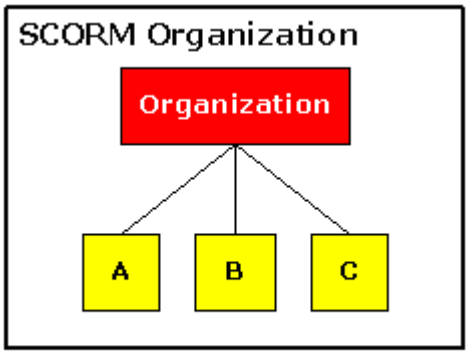

© Copyright 2003, Carnegie Mellon University, Some Rights Reserved

Figure 14: Sequencing in SCORM™ 1.2

In the early versions of SCORM™ , it was not possible to sequence content in an interoperable manner. SCORM™ -compliant content was presented to the learner, typically as a table of contents, and learners could select the content they wanted to see. Figure 14 ~~Figure 14~~ shows a SCORM™ organization and several SCOs (RIOs). Learners could select any RIO (represented by the yellow boxes). IDs found this aspect of SCORM™ 1.2 frustrating, since in many instances they wanted to ensure that learners would receive certain content in the order they prescribed.

Organization
The organization of a content package represents the ordering of RIOs into a tree structure and assigning sequencing behaviors. The organization outlines the entire structure you have created for your content. The organization provides order to the otherwise unordered collection of RIOs and their metadata. Each organization has one top-level RLO.

To overcome this limitation, IDs created very large SCOs (by making several CBT lessons like the yellow box in Figure 13 ~~Figure13~~ into RIOs like the ones shown as yellow boxes in Figure 14 ~~Figure14~~ .) Alternatively, IDs used the sequencing functionality provided by their in-house LMS. Neither solution worked well. Since the goals of SCORM™ include interoperability and content reusability, hard-coding functionality within or between lessons made complying with the SCORM™ guidelines impossible:

1) Content was not interoperable when hard-coded sequencing rules were present or when sequencing rules were defined using one LMS's proprietary functionality because the sequencing functionality of one LMS could not be read by another LMS.

2) Content could not be reused when individual SCOs relied directly on other RIOs for their sequencing. Hard-coding SCOs results in one SCO "looking for" another SCO that may or may not be present. Hard-coding also limits the ability to create new or custom content structures from the same instructional materials, since each time a new structure is desired, the code attached to each individual SCO has to be updated.

4.2.1. Sequencing Functionality in SCORM™ 2004

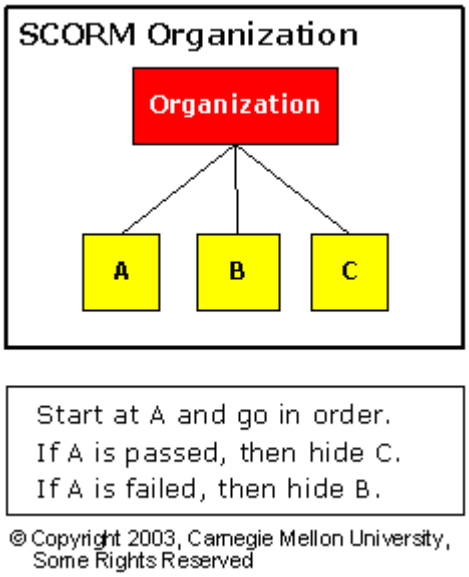

Figure 15: Sequencing in SCORM™ 2004

SCORM™ 2004 prescribes nearly all functionality that occurs *outside* of the SCO/RIO itself. With the inclusion of the sequencing functionality in SCORM™ 2004 , IDs have the capability to describe and prescribe the manner in which learners receive individual pieces of content from the LMS. Since the NROM is a SCORM™ -based model it complies with the SCORM™ sequencing functionality and guidelines.

The individual pieces of tracked content the learner receives are sharable content objects (SCOs)—RIOs in the NROM. SCORM™ does not permit one SCO/RIO to "call" or access another SCO/RIO directly. The LMS controls the movement of the learner from SCO/RIO to SCO/RIO with *inter*-SCO/RIO sequencing. The LMS performs all of the "branching" of the content based upon behaviors defined by the ID and input by a programmer. The resulting sequencing rules get stored in the LMS as part of the manifest. This allows the same set of SCOs/RIOs to be sequenced in many different ways, depending upon the ID who structures the content and the learner to whom the content will be delivered.

It is the *inter*-SCO (*inter*-RIO) sequencing that allows the ID to specify what is presented to the learner, when it is presented, and the attributes or functions the SCOs/RIOs entail. Inter-SCO (*inter*-RIO) sequencing is also how SCORM™ allows IDs to monitor and record the learner's choices and performance. All of this functionality occurs outside of the SCO/RIO itself, as shown in Figure 15 ~~Figure15~~ , so that content can be sequenced in an interoperable manner, unconstrained by coding within the SCOs/RIOs. *Intra*-SCO (*intra*-RIO) branching (the hard-coded navigation occurring inside an individual SCO/RIO is not tied to the LMS or to the content package, so it does not constitute SCORM™ sequencing nor is it required to adhere to SCORM™ sequencing guidelines. As a result, *intra*-SCO (*intra*-RIO) branching is not tracked by the LMS, so there is no way to report the learner's progress on individual aspects of the SCO/RIO via the LMS. However, a comprehensive score for the learner's performance on the SCO/RIO as a whole may be reported to and stored in the LMS. The scores reported to the LMS include passed/failed or a normative score between -1 and +1. Note that IDs can combine *intra*-SCO (*intra*-RIO) branching and *inter*-SCO (*intra*-RIO) sequencing to create the most effective learning experiences for learners.

4.2.2. Preparing to Sequence Your Content

The instructional techniques you traditionally employ may have to change slightly as you create SCORM™ -compliant instruction. Since the sequencing of the content is now being controlled by the LMS (which will generally be programmed by someone other than the ID), you must carefully specify the actions and behaviors you desire for each RIO and each RLO, all the way back to the base RLO. If you fail to do this, the actions and behaviors of your content will be the default values defined by SCORM™ , which may not result in the type of learning experience you had planned or desired.

Since the NROM adheres to the SCORM™ sequencing that is based on a tree structure, specifying the actions and behaviors you want for your learner requires the creation of a content structure diagram. To do this, return to the example from section 3.7.5.2 Identify the RIOs, where existing content was divided into RIOs (see Figure 10 ~~Figure10~~). The RIOs that were identified in Figure 10 ~~Figure10~~ have now been partially organized with labels as Figure 16 ~~Figure16~~ .

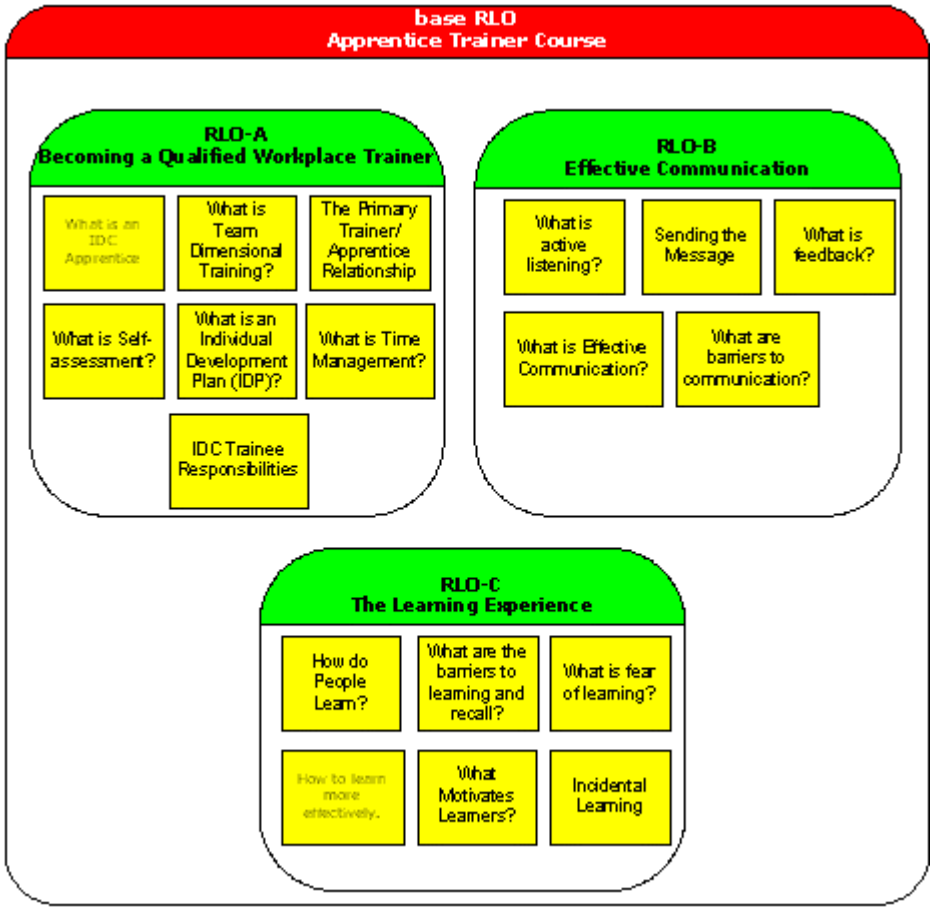

Modified with permission: © Copyright 2003, Carnegie Mellon University

Figure 16: RIOs organized for sequencing

So that you can quickly identify the difference between SCORM™ components, all of the diagrams in this guide have been created in corresponding colors. Yellow boxes represent **RIOs**. The green boxes above now represent what had been lessons in Figure 10 ~~Figure10~~ ; these boxes are now aggregations of content—**RLOs**. The red box, previously representing the course, now represents a **base RLO**.

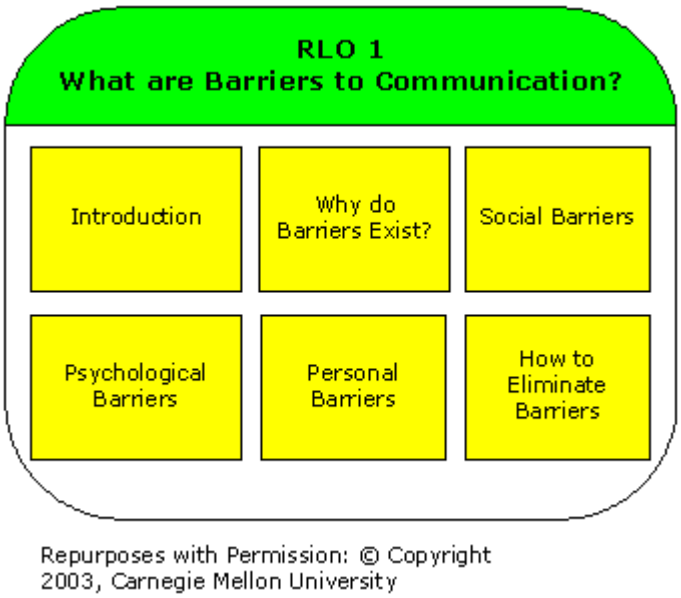

Figure 17: An additional RLO created from *What are Barriers to Communication* RIO

Remember that in section 3.7.5.2 Identify the RIOs you carefully scrutinized the Effective Communication RIOs you had identified and decided that some ofthem should be divided even further (see Figure 11 ~~Figure11~~ and Figure 17 ~~Figure17~~). Those RIOs will also have to be grouped before you can sequence them.

Once you have defined your RIOs, and considered some high-level groupings for them (RLOs or a base RLO), you can begin the process of determining the content structure diagram onto which you will apply content sequencing rules. The sequencing rules (generated by your programmer) will apply the behaviors you describe for your instructional materials to ensure the instructional integrity of your content.

4.2.3. Understanding Sequencing Terminology

Some terms you may have used to signify a specific function of instruction may have different meanings in SCORM™ when you sequence your content. This requires careful use of these words, keeping in mind their definitions within the context of SCORM™ sequencing. One example is the word "objective"(OBJ). In traditional instructional design, an objective is used to measure the attainment of a knowledge, skill, or ability in accordance with a predefined behavior, a prescribed condition, and an achievement standard.

Objective (OBJ)
For NROM sequencing purposes, an objective is a global variable that allows the LMS to share status values between RIOs/RIOs. This gives designers greater flexibility in structuring the content under SCORM™ guidelines. Depending on the designer's requirements for the instruction, the objective may or may not track actual learner objectives, skills, or abilities.

In SCORM™ , the objective (OBJ) refers to a convenient way that a SCO/RIO can pass *MasteryStatus* parameters to the LMS. There are two types of *MasteryStatus*

parameters: *PassFail* and *NormalizedScore*. You determine the criteria the RIO will use to report all the objectives' *PassFail* or *NormalizedScore* values, which will be passed to the LMS. *PassFail* simply represents whether the RIO was passed or failed. *NormalizedScore* reports a value for an OBJ to any decimal value between -1 and +1. With either of these parameters, you can choose to set their values based on a response to a single question, a complete assessment, or simply whether the RIO has actually been viewed. Each RIO can set or read multiple objectives, and a single objective can be set by or read by multiple RIOs.

Other terms with different meanings in SCORM™ include *complete* and *satisfied.* Traditional uses of these words would mean the learner had seen all of the content related to a given topic. For a RIO that uses the Application Programming Interface (API), you can decide the criteria that must be met for a RIO to be considered either *complete* and /or *satisfied*. For a RIO that does not use the API (a "non-communicative RIO"), the LMS will automatically set the RIO to *complete* as soon as the learner starts the RIO. As a consequence, *complete* for a non-communicative RIO does not necessarily mean that the learner saw any or all of the instructional material in the RIO. For example, the learner may have only seen the first page and then closed the RIO, thus marking the RIO complete. If you want to, or are required to, ensure the learner actually sees all of the content, then create RIOs that are single pages or do not have multiple assets.

Application Programming Interface (API)
The SCORM™ API is a standardized method for a SCO/RIO to communicate with the LMS when a learner is interacting with a SCO/RIO. There is a specific set of information the SCO/RIO can set or retrieve. For example, it can retrieve information, such as a student's name, or set values, such as scores.

4.2.4. Simplifying Content Sequencing

So that you do not have to devise a sequencing strategy from scratch for each lesson and learning experience you develop, this document provides several sequencing examples that describe potential behaviors of RIOs according to various instructional design strategies. Refer to Appendix H for these useful examples. The examples are designed to assist you in structuring your NROM content to comply with SCORM™ sequencing guidelines. Since the NROM is a SCORM™ -based model it complies with the SCORM™ sequencing functionality and guidelines.

The instances of the sequencing examples used as working examples in this document can be adapted to suit the needs of your desired learning outcomes. While the content design examples provided for discussion purposes in this section may show a limited number of HTML assets (pages) within the applied sequencing templates, there is no arbitrary limit to the numbers of HTML pages, Flash files, raw media files, etc., that may be included as assets in your individual instances of the sequencing templates.
In addition, any example or combination of examples can be "overlaid" on or combined with another example, creating a more complex instructional strategy for a course or a lesson. Combining the examples provided here will give you viable sequencing models

that you can adapt to meet your particular training and educational requirements for ILE content. Examples that show several models for more complex instructional strategies are also provided in the appendix. Depending upon how you apply behaviors to the structures, you can achieve a variety of outcomes.

These examples are not intended to be exhaustive, but they should help you begin to identify new ways in which you can construct SCORM™ -compliant ILE content while adhering to sequencing guidelines, and the true intent of SCORM™ and the NROM: creating R^3, interoperable, durable, and accessible instructional materials.

Table 9 provides a summary of the sequencing examples and models that can be found in Appendix H.

Table 9: Summary of Sequencing Examples and Models

Example or Model	Description	Rule Applications
Example 1	Single RLOs with a Single Asset	1
Example 2	Single RIO with Multiple Assets	1
Example 3	The Black Box; single RIO with multiple assets and complex internal structure	1
Example 4	Multiple RIOs with Assets	2
Example 5	Remediating Using Objectives	2
Example 6	Pre- and Post-Test Sequencing	1
Example 7	Pre- and Post-Test Sequencing (2)	1
Example 8	Remediating Using Objectives (2)	1
Example 9	Basic Three-way Branching	2
Example 10	Pre- and Post-Test Sequencing with New Content for Remediation	1
Model 1	Remediating Multiple RLOs	2
Model 2	Mastery Testing Multiple RLOs	1
Model 3	Pre- and Post-Test Sequencing with RLOs	1
Model 4	Traditional CBT Branching with Multiple Decisions	1
Model 5	Customized Learning Using Three-Way Branching	1

4.3. Develop and Code NROM Metadata

4.3.1. Acquire Instructional Metadata

It is essential that the developer/programmer receive the instructional descriptive data (metadata) along with the instructional design files from the ID. How the metadata is

encoded as XML will depend on the process that each individual company uses. The developer and/or the programmer will code most likely metadata.

4.3.2. NROM AND SCORM™ Metadata

The NROM has both mandatory (M) and optional (O) metadata tags. The metadata rules that are specific to each NROM level—Asset, RIO, RLO—dictate whether the metadata is mandatory or optional at the respective NROM level.

Some Assets require metadata while others do not[2]. In order for a single Asset to be reused, repurposed or referenced (R^3) it must have metadata so that it can be searched and found. If metadata is not attached, the single Asset cannot be included in a specific search constructed to return single Assets. However, if the intent is to reuse, repurpose, or reference a higher aggregation of Assets (i.e., RIO, RLO) then any Asset within the aggregation has R^3 potential. Assets assigned with metadata descriptions have greater R^3 potential as they may be returned as distinct, individual items by a specific search. **Within the NROM all Assets that are non-gratuitous media type files—text, graphics, images, sounds, animation, video, etc. require metadata**.

It is important to note that when metadata is assigned to an object **all** required SCORM™ metadata and respective best practices listed in the SCORM™ documentation (see www.adlnet.org) are mandatory under the NROM. The NROM metadata has been adapted from the SCORM™ metadata specifically for the NROM.

The required NROM metadata listed in the following table is in addition to SCORM™ metadata even if SCORM™ lists the metadata as optional and/or describes the metadata differently. For example, SCORM™ states that the 5.2 and 5.7 educational tags are optional; however, the NROM states that they are mandatory according to applicable rules. Specifically, the SCORM™ 5.2 Learning Resource Type lists different tokens than what the NROM 5.2 Learning Resource Type lists—the NROM tokens supersede the SCORM™ tokens, and should be used in place of the SCORM™ 5.2 tokens. Under the NROM, the metadata elements and their respective explanations, guidelines, and rules listed in Table 8 must be adhered to when developing ILE content.

Within the NROM metadata some tags act as parent tags while others act as child tags. It is important to understand that parent tags have no values associated with them. They act as containers for other tags—typically called child tags. Hence, if you use a child tag you must also use its parent tag. By default the gray highlighted categories (e.g., 1.0 General) listed in Table 10 are parent tags, and their respective sub categories (e.g., 1.2 Title) are child tags. The term "object" when used in the table below refers to the Asset, RIO, or RLO[3]—whichever is applicable. **Further explanation,**

[2]Gratuitous/incidental media type files that have little to no reuse value would not necessarily require metadata. For example, Assets such as a graphical space bar, graphical text, or a “Next” button would not necessarily require metadata.
[3] The metadata rules that apply to the RLO also apply to the base RLO.

guidelines, rules, and examples specific to the NROM metadata can be found in Appendices C and H.

Table 10: NROM Metadata Overview

Element	Explanation	NROM Level - Mandatory (M) - Optional (O)			Examples and Non-examples
		A	RIO	RLO	
1.0 General	**Describes the traits of an object.** • ***Note:** This tag is Mandatory at the Asset level *only if* the Asset receives metadata and/or the Asset is tagged with any of the 5.0 or 9.0 parent/child elements.	**M***	**M**	**M**	**This is the summary level element. Complete the fields below.**
1.2 Title	The name given to the object.	**M***	**M**	**M**	See Appendix C
1.4 Description	Provides a description of the object and allows for a narrative explanation.	**M***	**M**	**M**	See Appendix C
1.5 Keyword	Used to define common keyword(s) or phrases that describe the object.	**M***	**M**	**M**	See Appendix C
5.0 Educational	**Describes the educational characteristics or the theories of the object.** *** Note: This tag** is **Mandatory** at the applicable NROM level ***only if*** it meets the definition of one of the Learning Resource Type's tokens.	**M***	**M***	**M***	**This is the summary level element. Complete the fields below.**
5.2 Learning Resource Type	Identifies the object's type. This tag is not free form. It allows for at least one or more token to be assigned. **At least one of the following tokens must be assigned *IF* the object meets the definition of the following tokens**: • exam • self assessment	**M***	**M***	**M***	See Appendix C

Element	Explanation	NROM Level - Mandatory (M) - Optional (O)			Examples and Non-examples
		A	RIO	RLO	
	• scenario • practicum • simulation and game • other				
5.7 Typical Age Range	Identifies the level of instruction/target audience for which the content was designed. Tokens include the following: • Apprentice • Journeyman • Master	**M***	**M**	**M**	See Appendix C
8.0 Annotation	**Describes the use of the object and information on when and by whom the comments were created. This category enables IDs to share their assessments of NROM objects, suggestions for use, etc.**	**O**	**O**	**O**	**This is the summary level element. Complete the fields below.**
8.1 Entity	Identifies the entity that created the annotation.	**O**	**O**	**O**	See Appendix C
8.2 Date	Identifies the date the annotation was created	**O**	**O**	**O**	See Appendix C
8.3 Description	This field is left to the discretion of the creator. It is used to account for any additional information.	**O**	**O**	**O**	See Appendix C
9.0 Classification	**Describes the placement of an object in a given classification system.** • ***Note:** This tag is **Mandatory** at the applicable NROM level ***only if*** it meets the definition of one of the Purpose tokens.	**M***	***M**	***M**	**This is the summary level element. Complete the fields below.**
9.1 Purpose	The Purpose tag is used at applicable **RLO** or **RIO** level to identify the **Educational**	**M***	***M**	***M**	See Appendix C

Element	Explanation	NROM Level - Mandatory (M) - Optional (O)			Examples and Non-examples
		A	RIO	RLO	
	Objective—enabling, terminal, and, at the **Asset**, **RIO**, or **RLO** level to identify the applicable **Skill level—skill object**, **task**, **subtask**. The following tokens are used: • educational objective: enabling • educational objective: terminal • skill level: skill object • skill level: task • skill level: subtask				
9.3 Description	The 9.3 tag is a **free form text field** used to **describe** the assigned 9.1 tokens: • educational objective: enabling • educational objective: terminal • skill level: skill object • skill level: task • skill level: subtask	**M***	***M**	***M**	See Appendix C

4.4. Content Packaging

Once you have developed all of your physical RIO files, identified the metadata for each RIO and the metadata for the entire content package, and defined your base RLO, you can prepare to package your content for SCORM™ . The SCORM™ content package is a standardized way to exchange digital resources between different learning management systems (LMSs), authoring tools, content repositories, and operating systems.

Manifest
A manifest is a description of everything contained in your content package. Your programmer will create the manifest as an XML document. The manifest includes your organization and all the metadata for your RIOs.

In traditional instructional design terms, the content package would be everything needed to deliver the course, module, lesson, etc. to the learner. The size of your content package will depend on the structures you've created for your particular content and the manner in which you want them to be delivered to your learners. In SCORM™ , the content package contains two principal sections:

1) A manifest that lists all of the resources or assets you want to include in the package, the content structure diagram you created (called the organization), the sequencing rules, and all of the metadata for the RIOs, the RLOs, and the package itself

2) All of the actual RIO and asset files for the content package

Preparing your content package is an excellent time to organize all the files you've used during the development process, including your RIO and RLO design specifications. Delete or move any incomplete or unused materials, confirm all file names adhere to your naming conventions, and verify that all required metadata fields are complete. Once you've organized all of the files, ensure that the programmer can access them with relative ease. Depending on your process, use either a common file server or a CD-R.

Once the programmer has all of the necessary files, the programmer will create a manifest with your base RLO and sequencing rules and will store your metadata in the format required for SCORM™ . Finally, the programmer will create the package with the manifest and all of your RIO content files. Figure 18 illustrates the parts of a content package. Once the package is ready, you can, and should, test the package in any LMS to ensure it functions the way you had intended. If you have access to multiple LMSs, then test your content in as many of them as possible before releasing it.

There are tools that will perform the packaging functions described above. Inquire at your company if your developers use a tool to create content packages and manifests. If you do use a tool, make sure that you follow the procedures specific to that tool and your company for creating the content packaging.

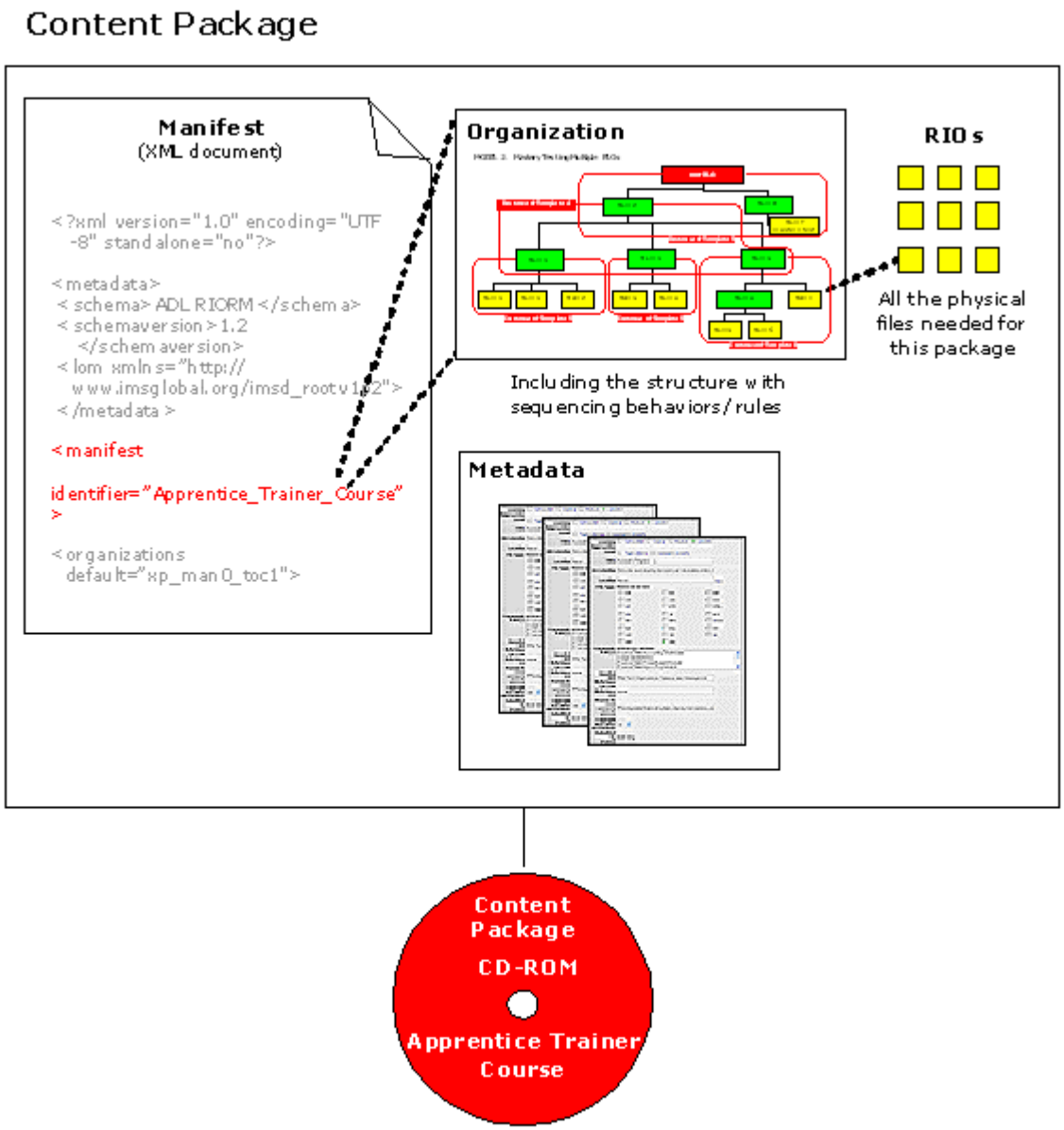

Repurposed © Copyright 2003, Carnegie Mellon University, Some Rights Reserved

Figure 18: Parts of the Content Package

5.0 ADDITIONAL DELIVERY METHODS

This section is under development. Additional topics to be developed are identified below.

5.1. Performance Support

Under development.

5.2. Job Aids

Under development.

5.3. PC Simulation

Under development.

6.0 EVALUATION

This section is under development. Listed below is the initial list of evaluation content areas to be discussed.

6.1. Formative Evaluation

Under development

6.2. Summative Evaluation

Under development

6.3. Training Effectiveness Evaluation (TEE)

Under development. This section will include information on return on investment (ROI) analysis as well as the other levels of analysis often found in four- and five-level evaluation models.

This page intentionally left blank.

PART THREE: ILE CONTENT DEVELOPMENT SUPPORTING DOCUMENTATION

7.0 SUPPORTING DOCUMENTATION

Supporting documentation for the design, development, implementation, and maintenance of instructional content development for the ILE include:

- The Training Project Management Development Plan
- The Instructional Media Design Package (design plan and prototype)
- The Style Guide

Each of the documents is a deliverable in the content development process. These products are under development and will be provided and available for use shortly. The intent to standardize supporting documents is to provide consistency across the NETC claimancy. Standardization also simplifies the creation of metadata. In the interim, general guidance is provided below.

7.1. Training Project Management Development Plan (TPMDP)

7.1.1. Definition

The TPMDP is the high-level project management document.

7.1.2. Purpose

The TPMDP assists in the management and tracking of multiple content development projects. The government's program/project manager and the content development team's project lead use the TPMDP to document and track the phases of development.

7.1.3. Content

The TPMDP contains a Project Summary, Assumptions, Target Audience, Changes to Scope, Reporting Requirements, Technical Approach, Deliverables, Roles and Responsibilities, Milestone Schedule, and a Project Master Schedule. Tables articulating the tasks identified in the Statement of Work, Deliverables, and Periods of Performance may be included.

7.2. Instructional Media Design Package (IMDP)

7.2.1. Definition

The IMDP describes in detail the primary audience, objectives, design, instructional and assessment strategies, presentation methodology, content structure and sequencing, and function of the content.

7.2.2. Purpose

The IMDP serves as the overall design document. It is to ensure that everyone on the team understands the scope of the project and the intended outcome.

7.2.3. Content

The IMDP includes the design document and a working prototype. It will contain the list of Skill Objects and the associated learning events required to support the training as identified in the Statement of Work. Extract from the Statement of Work the level of development that includes content to be:

- Accepted in the current format (documented search of existing content)
- Modified (specify level of detail)

It will contain flow/sequencing diagrams. Detailed discussion of sequencing may be found in section 4.1 ~~4.2~~ Content Sequencing.

A working prototype RLO will demonstrate the instructional design strategies (instructional and assessment) appearance, technologies, and examples to be used.

NOTE: A RLO may be presented to the learners in a number of ways, e.g., instructor-led, self-paced, collaborative, etc. The prototype shall represent the recommended methodologies of presentation.

If appropriate, the prototype shall represent the style of user interface including navigation controls and examples of all screen examples and screen layouts to be used. All features and functions of the final aggregated RLO shall be demonstrated, including instructor guidance, if appropriate, (either within the RLO or as adjunctive material) transitions, remediation, and feedback.

If unclassified, the prototype RLO shall be posted on a web server accessible by the government for review. A team working with Classified material will determine the best method for content development, review, and control.

The document should identify the version of the ILE Technical Specifications followed as well as the software packages used in development. Screen captures of all examples shall be provided.

7.2.4. Review and Approval

There are three stages of review:

1. Preliminary Design Review (PDR): The Draft IMDP will be submitted in electronic format for government review prior to Kick-off. At the Kick-off meeting the full team will discuss the Draft IMDP and provide the contractor with any recommended changes.

2. Engineering Design Review (EDR): The EDR examines the results of the working prototype for functionality within the ILE. The specific process for functionality testing will be described in the ILE Technical Specifications.
3. Critical Design Review (CDR): The CDR is the review of the Final IMDP that takes place before full production is launched. The government will sign approval documentation at this meeting.

7.2.5. Quality Assurance Procedures

Under development.

7.3. The Style Guide

A complete style guide is under development and will be integrated into this document in the near future. Until this portion is complete, the following general guidelines may be used.

7.3.1. Definition

A project-level Style Guide establishes the criteria, processes, and procedures a team follows throughout the process of creating instructional materials.

7.3.2. Purpose

The project Style Guide serves as the primary reference for most questions concerning the design, layout, and standardization that arise during the content development cycle.

7.3.3. Content

The project Style Guide may contain: standardized file naming conventions, required metadata fields, a discussion of the production process, more detailed roles specific to content development teams, job aids for programs or procedures the content development team will follow, and the quality control procedures and checklists the content development team will use. The project Style Guide should be minimally impacted by SCORM™ -specific conventions.

The Table 11 contains general style guidelines for content design.

Table 11: General Content Design Style Guidelines

Component	Guidelines
General	• Provide the necessary information in the fewest possible steps and shortest time possible • Provide a clear, consistent look • Writing style should be consistent and match the target audience • Allocate specific locations for specific instruction/prompts • Ensure key information is prominent • Use color consistently in text and graphics • Use sufficient margins at the sides, top, and bottom of pages or screens • Acronyms will be spelled out the first time used in the content; thereafter, the acronym may be used in the text. Periodically, remind the user of the full title or provide an alternate means for identifying the acronym, e.g., a pop-up box, roll over, etc. if in computer-based environment.
CBT or CAI (in addition to above)	• Present information in a top down, left to right format • Each screen should address one concept, procedure, or item of instruction • Auto-scrolling is recommended because screen variations at the end-user level cannot be determined
Text	
Layout	• Limit the amount of text on screen • Use short lines of 40-60 characters • Avoid long segments of text wherever possible • Use bullets, numbered lists, tables, and charts to break up lengthy sentences • Provide generous white space to separate blocks of text
Appearance	• Do not indent paragraphs • Use left justification for basic text • Use bold, not italics or underlining, for emphasis • Specify standards for all content including: heading type, font name, font size, and text appearance
Language	• Keep language simple, concise, and consistent

	• Do not use hyphenation to break words except for compound words • Avoid jargon and slang • Maintain parallel construction and subject-verb and noun-pronoun agreement • Use the Government Printing Office Style Manual for language standards
Audio	
	• Only design audio into lessons when it is critical to the mastery of the learning objectives • Narration should be limited to introductory or transitional material, or to support the explanation of complex or key material • Narration should complement the text; not repeat it • Create separate scripts for each changing element within the screen • Label the script and the event to explain the relationship • Avoid long pauses in visuals waiting for extended narration to finish • Make the transition clear from one concept to another • In the storyboard, state the actual words to be recorded • Keep language simple, active, and direct • Use short sentences • Define unfamiliar terms and acronyms • Spell out all numbers • If each letter is to be read in an acronym, format the acronym to reflect this (U-S-N) • Use a professional narrator • Narrator should use appropriate style and tone • Record all audio following ILE Technical Specifications

Visual	
General	• Visual elements should relate directly to the content • Provide recurring information in consistent locations • Maintain a constant perspective in a series of visuals, cueing the students if the perspective must change • Do not include contractor or other corporate logos in content, unless the logo is embedded in the visual element • Avoid cluttering the screen with visual elements • Re-use graphics to reinforce basic concepts • Use a single palette, and document the palette used • Use a single color scheme throughout the course • Background should be consistent throughout the course • Standardized color values will be defined for Caution and Warning labels throughout the Navy. Additional color values may be defined within specific communities or echelons, e.g., wiring diagrams, electrical flows, etc. These values will be detailed in the project style guide.
Graphics/Photos	• Graphics include clip art, drawings, charts, and tables • Avoid using too many visual cues or colors at once • Avoid distinctions based on color cue only • Ensure adequate contrast between text and background colors • Ensure that key details are easily identified • If graphics do not appear simultaneously with text, design graphics so that images appear on the screen before the text or captions • All media must be labeled following ILE Technical Specifications • Follow acceptable file formats specified in the ILE Technical Specifications
Video	• Ensure that actors follow directives on dress and appearance while in uniform • Ensure that actors comply with Occupational Safety and Health Administration directives • Ensure that sets are appropriate to actual work environment • Use close-up shots to grab attention and emphasize

	importance • Provide control buttons to allow instructors or students to play, re-play, or stop a video clip • Deliver video in acceptable file formats following ILE Technical Specifications
Animation	• Reserve “blinking” animations for critical situations requiring immediate attention or action • Avoid animation that wanders across the screen or otherwise distracts the student • Use special effects only when absolutely necessary for emphasis or transition
Navigation	
	• Give instructors or students a sense of control • Navigation must be self-explanatory and intuitive • Navigation should be as direct as possible • Provide clear instructions or cues for all activities required to advance the program • Specific navigation guidelines will be provided at a later date

This page intentionally left blank.

PART FOUR: CONTENT DEVELOPMENT TECHNICAL SPECIFICATIONS

8.0 TECHNICAL SPECIFICATIONS INTRODUCTION

The Integrated Learning Environment (ILE) provides an environment that supports the seamless delivery and management of training in a “blended” training format. The ILE will provide the IT infrastructure necessary to provide and manage both self-paced and instructor lead training. Currently there exists multiple stove piped legacy systems that track, deliver and manage training and training support. Those individual systems must be “integrated” or bound together to present a single touch point.

The ILE strategy establishes a seamless training management and delivery capability in support of the Revolution in Training goals of providing the right training to the right people in the right amount at the point of need. Implementing the ILE requires the establishment of the appropriate IT infrastructure to establish and manage reliable and efficient capabilities to manage and support training accounts, opportunities and resources in multiple formats. Current legacy training management systems and new emerging technology systems must be fully and seamlessly integrated to provide a single access and management point for all events and activities.

This section outlines the technical specifications and guidelines required to insure the technical compatibility between instructional content and the Integrated Learning Environment. It is important to note that the technical guidance contained within this document must be used in concert with the broader guidance contained within the current release of the Navy ILE Content Design Handbook. It should also be noted that, in future releases of this document, the guidance provided will increase significantly in scope and level of detail. The intent of this initial release is focus strictly on providing the core guidance deemed most critical to insuring compatibility with the ILE.

The guidelines in this document and the associated Navy ILE Content Design Handbook should be referenced and serve as the baseline for procurement contracts involving the acquisition, development and/or integration of any Navy Education and Training content, materials or assets.

8.1. ILE Architectural Overview

ILE currently consists of the following applications:

8.1.1. Navy Knowledge Online (NKO) Portal

- Single point of entry to ILE.
- Provides integration framework for legacy systems.
- Appian Knowledge Management Portal
- Located at http://www.nko.navy.mil.

8.1.2. Navy E-Learning Learning Management System (LMS)

- Contains the ILE master catalog for accessing informal education and training content.
- ThinQ Training Server Learning Management System
- Primarily manages learner lesson plans and training day to day progress
- Allows management of learning events
- Access via NKO

8.1.3. Learning Content Management System (LCMS)

- Provides for creation, storage, reuse, management, and delivery of learning content.
- OutStart Evolution Learning Manager
- Provides a template-driven environment for fast, efficient and consistent authoring of knowledge based content.

8.1.4. Corporate Enterprise Training Activity Resource System (CeTARS)

- Consolidation of independent schoolhouse and training information systems into a single source of classical instructor lead schoolhouse/training information systems.
- CeTARS integrates these systems as a single source for schoolhouse/training information. As a single integrated system, the CeTARS mission is to provide improved training information availability, timely and accurate schoolhouse data and near real time student tracking to the Navy/Marine Corps training community.
- CeTARS supports 100's of activities and schoolhouses via the Web, both within the expanded bandwidth of the CeNET community and Navy's Non-Classified Internet Protocol Router Network (NIPRNET) Wide Area Network (WAN) domain.
- Can be located at https://wwwnt.cnet.navy.mil/cetars/cetars.htm

8.1.5. Navy Training Management and Planning System (NTMPS)

- Data warehouse for all training and education information including sailor entry for Electronic Training Jacket.
- Can be located at http://www.ntmps.navy.mil

8.1.6. Skill Object Data Mart

- Repository of required skills, abilities, tasks and knowledge required to perform Navy jobs and duties.

8.1.7. 5 Vector Model (5VM)

The 5 Vector Model (5VM) defines the parameters around which a Sailor's personal and professional development is designed. Eventually, the 5VM will change the promotion and detailing process. For more information on the 5VM, go to http://www.excel.navy.mil/. The 5 Vectors are:

- Professional Development
- Personal Development
- Leadership
- Certifications & Qualifications
- Performance

8.2. Statement of Work (SOW) Specifications

Statements of work (SOW) must be very specific to ensure the Navy and the contractor are clear on what is being purchased and what necessary specifications, guidelines, and models are followed. This section will continue to be developed to provide additional examples and references.

Remember, however, that the MIL-HDBK-245D: *Department of Defense (DOD) Handbook for Preparation of Statement of Work (SOW*) is the overarching DOD guidance for the development of SOWs.

For a sample SOW, see Appendix I.

8.2.1. Data Model

Under development.

8.2.2. Data Item Descriptions (DIDs)

Under development.

8.2.3. Data Rights

Under development.

8.3. Tool Selection

Under development.

8.4. Delivery Environment

Unless individual delivery orders permit otherwise, vendors should design content for delivery via a web browser that is running on a PC configured in accordance with NMCI Gold Disk. Content developers **MUST NOT** design content requiring software components beyond those addressed in the following discussion on Gold Disk / Blue Disk contents.

Developers can expect client browsers will be configured in accordance with DISA's Configuration Guidance for Client Workstations and Applications To Implement the DoD Policy on the Use of Mobile Code Microsoft Windows 95/98/NT/2000-Based PCs Version 2, 07 April 2003. This document provides configuration guidance for browsers, e-mail products and office automation applications running on MS Win 95/98/NT-based PC Workstations. It is available at https://iase.disa.mil/mcp/index.html.

Other browser requirements:

- 128 bit encryption
- Java virtual machine and JavaScript enabled
- Cookies enabled
- MSIE 5.00.3809 or Sun Micro Systems JRE 1.3 or higher. Content should work with both versions

8.5. Workstation Minimum Hardware Specifications

Content providers should ensure their content runs as intended on systems meeting the following minimum hardware specifications.

- IBM compatible PC running Windows, 98, ME, NT, XP and 2000
- Microprocessor Speed: Pentium 1 GHz
- Hard Drive: 20 GB
- RAM: 128 MB
- Sound Card: 16 bit
- Speakers

- CD-ROM Drive: 12x
- Monitor display resolution 1024 x 768
- Color Depth: 16 bit
- Fonts: Small

8.6. Gold Disk Contents

Current as of: 27 FEB 2004

Operating System	MS Windows 2000 SP4	Microsoft
Office Suite	Standard Office Automation Software Included on the Gold Disk: * MS Word * MS Excel * MS PowerPoint * MS Access	Microsoft
Desktop Management	Diskeeper 7.0413	Executive Software
Email Client	MS Outlook 2000	Microsoft
Internet Browser	Internet Explorer MS 5.5 SP-2 128bit	Microsoft
Virus Protection	Norton A/V Corp Edition v7.5	Symantec
PDF Viewer	Acrobat Reader v5.05	Adobe
Terminal Emulator - Host (TN3270, VT100, X-Terminal)	Reflection 8.0.5 – Web Launch Utility	WRQ
Compression Tool	WinZip v8.1	WinZip
Collaboration Tool	Net Meeting v3.01 (4.4.3385)	Microsoft
Smart Card Middleware (unclassified only)	ActivCard Gold 2.2	ActivCard
Multimedia	RealPlayer One v2	RealNetworks
Multimedia	Windows Media Player v9	Microsoft
Internet Browser	Communicator 4.76	Netscape
Electronic Records Mgmt	Trim Context	Tower

Plug-ins

Web Controls	Macromedia Shockwave v8.5.1	Macromedia
Web Controls	Flash Player 7.014	Macromedia
Web Controls	Apple QuickTime Movie and Audio Viewer v 6.3	Apple
Web Controls	iPIX v6,2,0,5	Internet Pictures

Security Apps

Security	Intruder Alert v3.6	Symantec
Security	ESM v5.1	Symantec

Agents

Software Management	Radia Client Connect R20	Novadigm
Inventory, Remote control	Tivoli TMA v3.71	IBM/Tivoli

Remote Connectivity (Notebooks)

Dial-up connectivity	PAL v4.3	MCI/WorldCom
VPN	VPN Client v4.1	Alcatel

8.7. Blue Disk Contents

There is an initiative currently underway to supplement all NMCI seats with a standard complement of software components beyond those provided by the NMCI Gold Disk. Collectively, these components have become known as the NMCI Blue Disk. In general, the proposed contents of the Blue Disk consists of various drivers, CODECS, run-time engines, etc. that are likely to have broad applicability to Navy training. At the time of publication of this document, the layout of the Blue Disk and other contractual details have yet to be resolved. However, it is possible that resolution will occur in the relatively near future. Therefore, developers are encouraged to maintain active contact with their government sponsors so as to be aware of the current status of this initiative.

In addition to the Blue Disk that may become a Navy wide standard, there is another variant of the Blue Disk that applies to only NMCI seats within the NETC claimancy. The below listed software components can be assumed to be present on all NETC NMCI seats.

- Authorware Web Player 6.5
- JAVA 2 runtime environment standard edition for Microsoft Internet Explorer 5.5 with SP2 - Sun JRE 1.3.1_02-1.3.1_04
- Visio Viewer 2002
- Citrix 6.30.1050

However, developers must understand that producing content that depends on the presence of these components may preclude the delivery of that content to non-NETC seats. Government sponsors and content developers are encouraged to carefully evaluate the merit of allowing or disallowing the use of these NETC specific components.

8.8. 508 Accessibility

Section 508 of the American Disabilities Act requires that all Federal agencies' electronic and information technology be accessible to people with disabilities. This includes not only service members, but content designers and developers, retirees, and support personnel. 508 Compliance applies to both classified and unclassified materials.

The Navy is committed to making all web-based learning content accessible to each person who uses the site. Section 508 of the Rehabilitation Act requires all Federal agency electronic and information technology is accessible to people with disabilities,

including employees and members of the public. Content developers must ensure that content is Web-accessible to persons who may have disabilities. All ILE content should at a minimum meet all Priority 1 Checkpoints identified in W3C Web Accessibility Guidelines. In addition, developers must provide written documentation identifying which checkpoints were met. If, after best efforts, you cannot create an accessible page, provide a link to an alternative page that uses W3C technologies, is accessible, has equivalent information (or functionality), and is updated as often as the inaccessible (original) page. It is critical that the development team validate designs and page templates and the content of the web-based training throughout the development process to ensure that the web pages are accessible to all users. Web-based designs should be validated at every development milestone to avoid time consuming and potentially costly revamping efforts. Additionally, content can be made more accessible if developed with Cascading Style Sheets (CSS). ILE content developers are encouraged to read the W3C Web Accessibility Guidelines at the W3C Website, http://www.w3c.org/WAI.

8.9. DITSCAP/SSAA

Under development.

8.10. Mobile Code

Mobile code is an executable software program or script that traverses a network and executes at the destination machine. The DoD Policy memo further describes mobile code as software obtained from systems outside the enclave boundary that is downloaded and executed on the local system without explicit installation or execution by the recipient. A simple click of the mouse on a Web link could expose the user to malicious mobile code. These programs and scripts are provided as content by Web Servers to the user's Web browser. In most cases, the user is probably not aware that the Web browser is requesting, downloading and executing mobile code on their computer. Content developers should be familiar with and follow the recommendations concerning mobile code issues.

The controlling mobile code policy memo and the following guides are recommended for building content destined to run in the ILE can be found at https://iase.disa.mil/mcp/index.html

- Mobile Code Policy Memo, 7 November 2000
- Mobile Code FAQ's, 3 May 2002
- Mobile Code Developer's Guide, 15 August 2002

Developers can set up a simulated workstation environment to test content for mobile code using the Configuration Guidance for Client Workstations and Applications To Implement the DoD Policy on the Use of Mobile Code Microsoft Windows 95/98/NT/2000-Based PCs Version 2, 07 April 2003. This document can be found at https://iase.disa.mil/mcp/index.html.

The document presents step-by-step configuration guidance on the use of Category 1 and 2 mobile code technologies, along with guidance to protect against malicious mobile code in email (e.g., viruses, worms), as defined in the referenced policy document. Developers can expect that end users will be configured in a similar way.

8.11. Bandwidth Constraints

Although it is the goal of ILE to provide a rich and engaging learning experience, it is nonetheless necessary to balance this goal against constraints that may be present in the ILE environment. Principle among these potential constraints is the finite bandwidth available between an end user and the server employed for delivery of that user's ILE content. Therefore, it is necessary to insure that ILE content developers assess the performance of their deliverables in a representative environment. Accordingly, future content Delivery Orders, Statements of Work and Statement of Objectives will include requirements relative to the responsiveness of content as well as the methodology by which responsiveness will be measured. Although individual procurements may tailor this guidance, unless stated otherwise testing will be done in a network environment in which bandwidth between client and server is limited to 5.0 Mbps (megabits per second). Developers can choose to impose this 5.0 Mbps constraint using either hardware or software based mechanisms. With this bandwidth constraint in place, compliance with the following criteria shall be demonstrated:

- Maximum time for initial lesson loading – 10 seconds,
- Maximum time to proceed to successive screens/frames of the lesson – 5 seconds,
- Maximum time for initial response to a user interaction – 3 seconds.

The contractor shall be responsible for successfully conducting performance testing at their facility prior to submitting final deliverables to the government. The contractor, prior to delivery, will correct any deficiencies found during this testing.

8.12. Delivery Format

All content developed for the ILE must conform to the Navy ILE Content Design Handbook. Practically speaking, this equates to delivering ILE content in the form of a SCORM™ conformant SCO or SCOs However, it is acknowledged that there are alternative forms of delivery that should be considered for ILE. One example would be content developed using the Evolution Learning Manager from OutStart Inc. It is possible to develop content using Evolution that is rendered on demand, directly from an internal Evolution database. In such a case, the instructional content is rendered into browser compatible HTML/DHTML, but never exists as a pure SCORM™ conformant SCO. Although this may be a reasonable approach, the Navy would likely have greater

potential for re-use, re-purposing, etc. if the content in question could be published in the form of a SCO should circumstances so dictate.

Consequently, any content developer proposing a delivery format other than that defined in the Navy ILE Content Design Handbook will be required to provide a mechanism by which the Navy, at a later date, could transform the content to follow the Navy Reusable Object Model, independently and without further assistance from the development contractor. To the extent possible, the contractor should design the content such that there is no difference in the performance and features of the content or the underlying performance tracking capabilities, regardless of the delivery format (SCORM™ vs. non-SCORM™). In the event there are unavoidable differences in how the content will perform in the different delivery formats, the government will be so apprised as part of the contractor's proposal and the government will retain the right to make a final decision as to whether these inconsistencies are acceptable.

8.13. User Control of Lengthy Operations

There may be instances in which there are legitimate reasons for ILE content to run for relatively long periods without any direct user interaction. For example, there might be instructional value in an extended video segment. However, even in such circumstances, ILE content should include provisions that allow the learner to terminate any such sequence prematurely. Accordingly, any ILE content in which there are autonomous sequences (video, downloads, animations, etc.) of greater than 15 seconds shall have provisions that allow early, user controlled, termination of that sequence. Additionally, should the learner exercise the early termination option, termination must be performed in a controlled and graceful manner with the learners system left in a stable state and without any consequential loss of data of functionality.

8.14. Content to LMS Communication

The Navy's LMS implemented all of the mandatory SCORM™ API functions required for execution, state management, and data transfer. It is assumed that once the SCO is launched it can then "get" and "set" information with an LMS. All communication between the API Adapter and the SCO is initiated by the SCO. There is currently no supported mechanism for LMSs to initiate calls to functions implemented by a SCO.

8.14.1. Functions of the API Adapter Object

The functions of the API Adapter object are threefold:

- *Execution State*
  Two of the API functions, *LMSInitialize("")* and *LMSFinish("")*, handle execution state.

- *State Management*

The API has three functions that are used to handle errors. These three API functions are: *LMSGetLastError()*, *LMSGetErrorString(errornumber)* and *LMSGetDiagnostic(parameter).*

- *Data Transfer*

8.14.2. Data Transfer API Functions

The remaining three API functions are used to transfer data to and from an LMS: *LMSGetValue(data model element)*, *LMSSetValue(data model element, value)* and *LMSCommit("").* Note that the API is designed to get and set data values that are separately defined by an external data model.

- Initialize – This indicates to the API Adapter that the SCO is going to communicate with the LMS. It allows the LMS to handle LMS specific initialization issues. It is a requirement of the SCO that it call this function before calling any other API functions.
- Bookmarks – Check for content's method to update the student's bookmark when the student changes pages
- Credit – Used by the LMS system to indicate whether or not the student is taking the SCO for credit. All content is taken for credit on the Navy's LMS.
- Scoring - The raw score for a SCO may be internally calculated in any manner that makes sense to the developer, and represents a final, normalized score for the SCO. For instance, it could reflect the percentage of objectives complete, it could be the raw score on a multiple-choice test, or it could indicate the number of correct first responses to embedded questions in a SCO. The LMS initializes the raw score to " " or "NULL". If the content developer does not want a SCO included in the final calculation of the final score for the course then the raw score for a SCO should not be set. The cmi.core.score.raw can be a normalized value between 0 and 100. However, the content developer should not set "0" as a score unless it is to be averaged in with other SCOs for a final grade in the course.
- Lesson Status – This is the current student status as determined by the LMS. Six status values are possible
    - Completed: All of the elements in the SCO were experienced by the student. No associated raw score should be sent.
    - Incomplete: The SCO was begun but not finished.
    - Passed: Necessary score was achieved. Student is considered to have completed the SCO and passed. This should only be set for those SCOs associated with sending a passing raw score.
    - Failed: The SCO was not passed. Student is considered to have completed the SCO and failed. This should only be set for those SCOs associated with sending a failing raw score.
    - Not Attempted: The SCO was not initialized.

- Finish – The SCO must call this when it has determined that it no longer needs to communicate with the LMS, if it successfully called LMSInitialize at any previous point. This call signifies two things: 1) The SCO can be assured that any data set using LMSSetValue() calls has been persisted by the LMS. 2) The SCO has finished communicating with the LMS.

8.15. File Structure, Naming and Storage

During the design and development process, the designers, developers, technical writers, programmers, subject matter experts, and quality assurance personnel handle numerous files of varying types. Creating a standard format for all folders and file names will make it faster and easier for all parties to identify and located the files they need. At a minimum, a file should include the name, and/or number of the course for which it was created, the module or lesson number, a description of the item, and a version/revision number. The names should be as intuitive as possible, so that developers and programmers can quickly and easily identify files without having to view the contents of each file to ensure they are using the correct file. In addition to standard file names and conventions, ensure that, during the development process, files are stored in a central location and accessible to the entire production team. Filenames should not have spaces or special characters and should not be longer than 20 characters.

8.16. Databases/Data Sources

The ILE can provide support for databases such as Microsoft Access that don't require a special ODBC connection. For content delivered in an external database, it is recommended that content developers provide a DSN-less connection to the database. A DSN-less connection is much faster than using a system DSN and doesn't require a ODBC registry entry. Dynamically delivered content running from a separate database will not be given any ODBC read write permissions/capability that is not defined in the SCORM™ API Adapter functions for SCORM™ Runtime Data elements. Using XML technologies and HTML as data sources are highly recommended and supported by most W3C standards-based browsers.

8.17. Server Side Scripting

Server-side scripting technologies such as Active Server Pages (ASP), PHP Hypertext Preprocessor (PHP), and Cold Fusion often change and are sometimes not backward compatible. In addition, server-side technologies are platform-dependent and don't promote portability. ASP is currently the only supported server-side scripting technology in the ILE. However, the Navy ILE strongly discourages against developing content that is strictly dependent upon any server-side scripting technology.

8.18. Client Side Scripting

Content developers are encouraged to create content according to the W3C Document Object Model (DOM). The DOM is a platform- and language-neutral interface that will allow programs and scripts to dynamically access and update the content, structure and style of documents. The document can be further processed and the results of that processing can be incorporated back into the presented page. The DOM provides a standard set of objects for representing HTML and XML documents, a standard model of how these objects can be combined, and a standard interface for accessing and manipulating them. Content developers can support the DOM as an interface to their data structures and APIs, and write to the standard DOM interfaces rather than browser-specific APIs, thus increasing interoperability. Dynamic HTML (DHTML) is a term used to describe the combination of HTML, style sheets and JavaScript that allows documents to be animated. DHTML can be used by content developers as long as the syntax utilizes the standards such as the DOM and semantics of the general purpose, cross platform, vendor-neutral scripting language ECMAScript.

8.19. Cascading Style Sheets

Before version releases, 6.2 of Netscape and version 6 of Internet Explorer, web developers faced difficulties in implementing many of the W3C standards because the browsers previously did not implement accessible technologies like Cascading Style Sheets or implemented them inconsistently. Now content can be made more accessible if developers use Cascading Style Sheets (CSS). With CSS-styled pages, users can easily apply personalized formatting to web documents. A page design using specific font colors and backgrounds, for example, presents a problem for users with color blindness: the contrast between the text and background may not be enough for the text to be distinguishable. If the colors are set via a style sheet, users can set their browser preferences to override your settings and can apply their own style sheet to the page instead. With CSS-styled pages, the user can transform web content into a format that addresses their requirements for accessibility.

8.20. Streaming Media

Most Real Network Media and Windows Media files will be placed on a dedicated ILE streaming media sever. The current ILE architecture utilizes the Windows Media Services Version 9.0 and Real Systems Version 8.0. The ILE architecture currently does not offer the capability to support Flash Remoting. During the content development process and prior to final content submission it is imperative that the content developer engages the ILE NEL content team for recommendations, ILE supported streaming media types and up-to-date instructions for coding media file URLs within their content.

Due to current media vendor technical limitations “streaming media” will not run in an https/SSL environment. Therefore the streaming media files will be located on a server different then where the actual course content files reside, “content server”. In some

cases, relatively few and small media files can be located and served up from the "content server". Using the HTML "embed" tag or similar tags for Windows Media, Quick Time, and Flash files have been tested in the current ILE (https/SSL) environment and will work. NOTE that these files are NOT being streamed. Real Network Media files WILL NOT work in this scenario. Media files not using an HTML "embed" type tag may work if the media file can be downloaded to the client machine and then ran from the applicable media player. This is not the preferred way due to bandwidth considerations and client side computer settings.

8.21. Java Virtual Machine

Java Virtual Machines (VM)- Due to NMCI restrictions, users can't download the Sun Micro Systems VM to the client computer. NETC has requested the Sun VM be added to all NMCI computers (Gold Disk) or pushed out to users within the enclave. ILE testing has determined that some content will function properly, communicating with the LMS, with either VM installed, however some content only functions properly dependent on the specific VM installed. It is incumbent on the content developer to insure content will work with either VM installed because Microsoft will no longer be authorized by Sun to have the ability to support the Microsoft VM after the summer, 2004. See http://www.microsoft.com/java for more information.

8.22. Testing

All content should be tested for interoperability prior to submission for hosting on Navy E-Learning. Unless stated otherwise in individual orders, a representative sample of all content should be tested using Content Compatibility Center (C3) before submitting final deliverables for hosting. The C3 is a web-based tool that content developers can use to test their SCORM™ or AICC content for interoperability with the Navy LMS. Access to C3 can only be provided to government sponsors, SYSCOMS, and naval learning centers. Any government contractor in need of access to the C3 must obtain approval through the government sponsor. Government sponsors can request a C3 account by visiting the ILE content support center. The C3 provides a detailed logging report system allows users to access log files so users can troubleshoot and review invalid URL errors, invalid manifests, etc. The log files not only identify errors encountered through the course, but also suggest modifications that can be made to solve or work/around the error. In addition to accessing the log files, customers and developers can use the browser's java console feature to monitor the output of the API SCORM™ data model calls executed by the content. Because the output is similar to the course program code, a SCORM™ content developer will be able to review and understand identified problems in less time than a non-technical user.

Developers are also required to test a representative sample of their content using the ADL Test Suite (available at http://www.adlnet.org). All content submitted for hosting within the Navy ILE must be accompanied by an electronic version of the ADL Test

Suite Log files. These three log files should provide the results for the Sharable Content Object (SCO) Run-Time Environment Conformance Test, the Meta-data Conformance Test, and the Content Package Conformance Test.

In special circumstances, developers can also request assistance relative to prototype testing from the Navy E-Learning content manager. However, it is important to note that this support will be provided only as a means of validating the technical compatibility of content and should not be viewed as a means of exercising a quality control process that would normally be the responsibility of content developers.

Subject matter and functional testing should be additionally performed by readers outside of the development team who are willing to supply informed criticism and report programming bugs, typographic errors, and critique the overall design and effectiveness of the content.

9.0 CONTENT SUBMISSION METHOD

Content is provided via FTP (File Transfer Protocol), CD-R or DVD as specified in individual delivery orders. In either case, SCORM™ content should be delivered as a conformant content package. For more information on the Content Packaging Conformance Requirements, refer to http://www.adlnet.org/

9.1. Deliverables

Content submitted for hosting on ILE should contain the following:

- Content package
- Verification of a Virus Scan on the extracted contents
- Content submission form and checklist
- Life Cycle Maintenance Guide
- Installation instructions for staging the content on a web server
- Assessment answer keys (only for content with assessments, tests, quizzes, etc.)
- Course instructions describing navigation and completion requirements.

9.2. Manifest Properties

A well-formed and valid manifest should be verified before a content package is submitted for hosting. IMS has updated the Content Packaging Schema to support the Final Recommendation of the W3C XML Schema specification. Currently, several commercial tools support Schema validation including: Xerces, XML Authority, XML Spy, and Oracle parsers.

A visible course title element must exist within the manifest. Tools such as the Microsoft LRN Toolkit do not create a visible course title. If content developers use such a tool,

the title element must be manually entered into the manifest. At least one content object or 'SCO' is required for a content package. All SCOs should be listed under the organization element.

The resources described in the manifest are physical assets such as web pages, media files, text files, assessment objects, or other pieces of data in file form. Resources may also include assets that are outside the Package but available through a URL, or collections of resources described by (sub) Manifests. The combination of resources is generally categorized as "content". Each resource may be described in a <resource> element within a manifest's XML. This element includes a list of all the assets required to use the resource, and listing of resources is necessary to ensure content interoperability. The files included in the Package are listed as <file> elements within such <resource> elements. For more information, refer to the IMS Content Packaging Best Practice Guide http://www.imsglobal.org

9.3. Content Packaging

Once you have developed all of your physical RIO files, identified the metadata for each RIO and the metadata for the entire content package, and defined your base RLO, you can prepare to package your content for SCORM™ ™. The SCORM™ ™ content package is a standardized way to exchange digital resources between different learning management systems (LMSs), authoring tools, content repositories, and operating systems.

In traditional instructional design terms, the content package would be everything needed to deliver the course, module, lesson, etc. to the learner. The size of your content package will depend on the structures you've created for your particular content and the manner in which you want them to be delivered to your learners. In SCORM™ ™, the content package contains two principal sections:

- A manifest that lists all of the resources or assets you want to include in the package, the content structure diagram you created (called the organization), the sequencing rules, and all of the metadata for the RIOs, the RLOs, and the package itself
- All of the actual RIO and asset files for the content package

Preparing your content package is an excellent time to organize all the files you've used during the development process, including your RIO and RLO design specifications. Delete or move any incomplete or unused materials, confirm all file names adhere to your naming conventions, and verify that all required metadata fields are complete. Individual delivery orders will specify submission of the content package in a CD-R or DVD format.

9.4. Life Cycle Management

Under development.

10.0 OPERATIONAL AVAILABILITY

Under development.

10.1. Change Process

Under development.

10.2. Scheduling Work

Under development.

10.3. Configuration Management

Under development.

11.0 COPYRIGHT

Authors of web content are viewed as having the same rights as those of other materials, and anyone who violates those rights could be subjected to penalty. Copyright is granted to the creator of a work the moment it is fixed in a tangible medium. Though a Web page rendered on a computer screen doesn't appear to be tangible, copyright is granted to Web authors upon creation of any single page. A page doesn't need to have a copyright notice in order to be protected by copyright law. As technology continues to evolve, the need for an appreciation of both information proprietors' rights and user privileges like "fair use" is expected to intensify.

"Fair use" is the most well-known and most important exception to the copyright owner's rights. The concept of "fair use" was established in the Copyright Law of 1976. It specifies situations in which copyrighted materials may be used without express permission of the copyright holder. The four factors that define "fair use" interpretation include: purpose, nature of work, amount and market effect. The definition and accompanying factors protects the creator by ensuring that the quantity of the work used is negligible, and of little adverse effect to the market for the work, and that, whenever possible, permission of the creator is sought.

Unfortunately, the lack of intellectual property rights for the web and distance education has forced developers to produce course applications that hinge upon incorporating a distorted balance between copyright law and "fair use". Web applications and web pages should be considered as publications and intellectual property rights will be applied as it would in any other publishing medium. Since copyright law is a bit murky

when it comes to issues involving teaching, distance education and the like, obtaining permission is the only solution presently given.

Content developed specifically for the Department of the Navy shall become the property of the US Government and be available to all Government entities without restrictions.

It is the responsibility of the contractor to ensure that no copyright laws have been violated in the preparation of the deliverables. When required, the contractor shall follow the provisions of SECNAVINST 5870.5 of 26 Aug 1988 to request the use of copyrighted material.

In the event that copyright protected material has been used to develop the content, the contractor shall provide paper-based and electronic copies of copyright permission to the Contractor Officer Representative (COR).

Each media object shall be identified/tagged as originally produced by the contractor, originally produced by the Navy with the identified command, or other source.

Photos or media obtained from the Internet must be identified by website, file name, and permission granted. Initial requests to use internet-obtained media may be done via email and documented; however, before the final project is released to the library of content objects for use, the formal receipt of permission on Navy letterhead must be received.

The contractor should not assume that media files appearing on Navy sites are "owned" by the Navy and are free of copyright restrictions.

The Commanding Officer responsible for the content development project is liable in the case of copyright violation.

This page intentionally left blank.

PART FIVE: REFERENCES AND APPENDICES

12.0 REFERENCES

Advance Distributed Learning (2003). Retrieved March 15, 2004 from http://www.adlnet.org/index.cfm?fuseaction=DLGuidDeta&kbaseid=215&page=1&orderCategory=kbaseAddon&orderDirection=DESC&kbasecatid=107.

Baker, E. (1998, November). Understanding educational quality: Where validity meets technology. *William H. Angoff Memorial Lecture Series*. Princeton, NJ: Educational Testing Service. Retrieved March 1, 2004, from http://www.ets.org/research/pic/angoff5.pdf.

Baker, E. L., Aschbacher, P.R., Niemi, D., & Sato, E. (1992). *CRESST performance assessment models: Assessing content area explanations*. Los Angeles, California: National Center for Research on Evaluation, Standards, and Student Testing.

Bransford, J. Toward the development of a stronger community of educators: New opportunities made possible by integrating the learning and sciences and technology. Retrieved March 3, 2004, from http://www.pt3.org/VQ/html/bransford.html.

Barritt, C. & Alderman, F. L. Jr. (2004). *Creating a reusable learning objects strategy: Leveraging information and learning in a knowledge economy*. San Francisco, Pfeiffer.

Biehler, R. F. & Snowman, J. (1977). *Psychology applied to teaching*. Boston: Houghton Mifflin.

Bransford, J. D., Sherwood, R. S., Hasselbring, T. S., Kinser, C. K., & Williams, D. M. (1990). Anchored instruction: Why we need it and how technology can help. In D. Nix & R. Spiro (Eds.), *Advanced in computer-video technology, computer, cognition, and multimedia: Exploration in high technology*. Hillsdale, NJ: Lawerence Erlbaum Associates, Publishers.

Clark, R. (1998). *Building expertise: cognitive methods for training and performance improvement*. Washington, DC: International Society for Performance Improvement.

Clark, R. & Wittrock, M. C. (2000). Psychological principles in training. In S. Tobias & J. D. Fletcher (Eds.), *Training and retraining: A handbook for business, industry, government, and the military* (pp. 51-84). New York: Macmillan Reference.

Clark, R. (2002). Applying cognitive strategies to instructional design. Performance Improvement, 41(7), 10-16.

Clark, R. (2003). Building expertise: Cognitive methods for training and performance improvement (2nd ed.). Silver Spring, MD: International Society for Performance Improvement.

Clark, R. (2003). E-Learning and the science of instruction. San Francisco: Jossey-Bass Pfeiffer.

Collins, A. Brown, J. S., & Newman, S. E. (1989). Cognitive apprenticeship: Teaching the craft of reading, writing, and mathematics. In L. B. Resnick (Ed.), Knowing, learning, and instruction: Essays in honor of Robert Glaser (pp. 453-494). Hillsdale, NJ: Lawrence Erlbaum Associates.

Craik, K. (1943). *The Nature of Explanation.* Cambridge: Cambridge University Press.

Donovan, M. S., Bransford, J. D., Pellegrino(Eds.) (2000). *How People Learn: Bridging Research and Practice.* The National Academy Press. Retrieved February 28, 2004, from http://www.nap.edu/openbook/0309065364/html/R1.copyright , 2000.

Dick, W. and carey, L. (1996). *The systematic design of instruction (Fourth Edition).* New York: HarperCollins College Publishers.

Gagne, R. M., Briggs, L. J., and Wager, W. W. (1988). Principles of instructional design (3rd ed.). Chicago: Holt, Rinehart and Winston, Inc.

Gronlund, N. E. (1988). *How to construct assessment tests (Fourth Edition)*. Englewood Cliffs, NJ: Prentice Hall.

Harckbarth, S. (1996). The Educational Technology Handbook: A comprehensive guide. Englewood Cliff, NJ: Educational Technology Publications.

IMS Global Learning Consortium, Inc. (2000). *IMS Question & Test Interoperability Specification: A Review*. A QTI White Paper from IMS.

Jonassen, D. & Tessmer, M. (1996). An outcomes-based taxonomy for instructional systems design, evaluation, and research. *Training Research Journ*al, 3. pp 11-46.

Jonassen, D. (1999). Designing constructivist learning environments. In Reigeluth, C. M. (Ed.), Instructional-design theories and models, Volume II (pp 215-239). Mahway, NJ; Lawrence Erlbaum Associates.

Jonassen, D. H. (2004). Handbook of research on educational communications and technology (2nd ed.). Mahwah, NJ: Lawrence Erlbaum Associates.

Maki, W. S. and Maki, R. H. (2002). Multimedia comprehension skill predicts differential outcomes of web-based and lecture courses. *Journal of Experimental Psychology: Applied, 8* (2), 85-98.

Mager, R. F. (1997). *Preparing Instructional Objectives (3rd ed.)*. Atlanta: The Center for Effective Performance, Inc.

Mayer, R. E. (1999). Designing instruction for constructivist learning. In Reigeluth, C. M. (Ed), *Instructional-design theories and models, Volume II* (pp 141-159). Mahway, NJ; Lawrence Erlbaum Associates.

Merrill, M. D. (1997). Instructional Transaction Theory: An Instructional Design Model Based on Knowledge Objects. In R. D. Tennyson, F. Schott, N. Seel & S. Dijkstra (Eds.), *Instructional Design: International Perspective. Theory, Research, and Models. Vol.1* (pp. 381-394). Mahwah, NJ: Lawrence Erlbaum Associates.

Merrill, M. D. (2002). A pebble-in-the-pond model for instructional design. *Performance Improvement, 41(7*), 41-46.

Merriënboer, J. J. G. van (1997). *Training complex cognitive skills: A four component instructional design model for technical training*. Englewood Cliffs, NJ: Educational Technology Publications.

Nitko, A. J. (1996). *Educational assessment of students*. 2nd ed. Englewood, NJ: Merrill.

Parshall, C. G., Spray, J. A., Kalohn, J. C., Davey. T. (2002). *Considerations in computer-based testing.* New York: Springer.

Pellegrino, J. W., Chudowsky, N., Glaser, R. (Eds.). (2001). *Knowing what students know: The science and design of educational assessment*. Washington, D C: National Academy Press

Pressley, M. & Ghatala, E. S. (1990). Self-regulated learning: Monitoring learning from text. *Educational Psychologist, 25*, 19-33.

Ragan, T J. and Smith, P. L. (2004) Conditions theory and models for designing instruction. In D. H. Jonassen (Ed), *Handbook of research on educational communications and technology* (pp. 623-649). Mahway, NJ: Lawrence Erlbaum Associates.

Reigeluth, C.M. (1999*). Instructional-design theories and models: A new paradigm of instructional theory, Volume II*. Mahway, NJ: Lawrence Erlbaum Associates.

Reigeluth, C. M. and Moore, J. (1999). Cognitive education and the cognitive domain. In Reigeluth, C. M. (Ed.), *Instructional-design theories and models, Volume II* (pp 51-68). Mahway, NJ; Lawrence Erlbaum Associates.

Rotjwell, W. J. and Kazanas, H. C. (1992). *Matering the instructional design process*. San Francisco: Jossey-Bass Publishers.

Schank, R. C., Fano, A., Bell, B., & Jona, M. (1993/1994). The design of goal-based scenarios. *The Journal of the Learning Science*, 3(4), 305-345.

Schwarts, B. L., and Perfect, T. J. (2002) Introduction: toward an applied metacognition. In Perfect, T. J. & Swarts, B. L. (Eds.). *Applied Metacognition. Cambridge*: Cambridge University Press.

Wiley, D. A. (2001). *The instructional use of learning objects.* Available at: Retrieved February 11, 2004, from http://www.reusability.org/read/.

Wiley, D. A. (2002). Learning objects -- a definition. In A. Kovalchick & K. Dawson (Eds.) *Educational Technology: An Encyclopedia*. Santa Barbara: ABC-CLIO. Retrieved February 11, 2004, from http://wiley.ed.usu.edu/docs/encyc.pdf

Woolfolk, A. E. (1998). *Educational Psychology.* Boston: Allyn and Bacon.

This page intentionally left blank.

13.0 APPENDICES

APPENDIX A: GLOSSARY

Below is a glossary of terms to assist you when reading this document.

5VM	5 Vector model—defines the parameters around which a Sailor's personal and professional development is designed. The 5 Vectors are: • Professional Development • Personal Development • Leadership • Certifications & Qualifications • Performance
ADL	The Advanced Distributed Learning (ADL) Initiative—collaborative effort between government, industry and academia. Its goal is to establish a new distributed learning environment that permits the interoperability of learning tools and course content.
Aggregation	Content Aggregation is the process of aggregating resources (SCO /RIOs) into a defined structure (content structure) to build a learning event. An aggregation is a grouping of related RIOs, along with the rules that control the presentation of the grouped material to the learner. A learning event can be constructed recursively; hence a content structure has the shape of a tree, with RIOs/SCOs forming the leaves and aggregations (RLOs) representing the nodes.
API	Application Programming Interface
Asset	A single media element or text element (e.g. an image, audio file, or html file) that can be delivered to a Web client.
Assessment	The process used to systematically evaluate a learner's skill or knowledge level (ASTD).
Post assessment	Any activity designed to be taken after a learning event to confirm that a learner has mastered either the enabling objective at the IO level or the terminal objective at the LCO level.
Assessment instruments	Items that are grouped together to form tests, quizzes, exams, or simulations for the purpose of assessment.
Assessment item	Each individual question or task the student is asked to address for assessment purposes.
CBT	Computer Based Training
CMI	Computer Managed Instruction
Cognitive Apprenticeship	Model where experts and novices interact while focusing on a realistic, job-related task to develop the learner's essential cognitive skills.

Community of practice	A self-organized, deliberate collaboration of people who share common practices, interests or aims and want to advance their knowledge. When the community proves useful to its members over time, they may formalize their status by adopting a group name and a regular system of interchange. www.sims.berkeley.edu/courses/is213/s99/Projects/P9/web_site/glossary.htm
Concept maps	A graph that represents knowledge, with nodes representing concepts and arrows representing relations between the concepts.
Content repository	Storage facility for digital objects and files made searchable by using metadata.
Enabling objective (EO)	Smaller objective that forms a part of a terminal objective. In our model one RIO addresses each enabling objective.
GFI/M	Government Furnished Information/Material—materials provided to contracted designers and developers for the creation of ILE content
HPSM	Human Performance System Model—cyclical four step process of navy training: 1. Define requirements 2. Define solutions 3. Develop components 4. Execute and measure
ID	Instructional Designer—one who analyzes instructional problems and designs their solutions
IDC	Instruction Delivery Continuum—new framework for the delivery of instructional material for the purposes of Navy training.
IDP	Individual Development Plan—A document that includes an assessment of current skills, and a timeline and sources for development to achieve future goals. Outlines the way in which the employee will develop the knowledge, skills, and abilities needed to meet changing organizational needs and environmental demands and/or prepare to achieve future career goals (www.goer.state.ny.us/workforce/glossary.html).
ILE	Integrated Learning Environment—The Navy Integrated Learning Environment has been established to provide the technical and administrative infrastructure for the acquisition, development, storage, maintenance, and distribution of learning content.
IMS	Worldwide non-profit organization which develops and promotes the adoption of open technical specifications for interoperable learning technology
Instructional strategy	All materials, methods, activities, and assessments chosen to support a specific learning goal.
ISD	Instructional Systems Design—an arrangement of resources and procedures

	so as to promote learning
JTA	Job Task Analysis—occupational and human performance analyses to identify the tasks, sub tasks, knowledge, skills, abilities, tools, performance standards, and instructional learning objectives related to a specific job.
Learner-centric	Learning designs which allow the learner to have control of the learning experience by making choices as to what will be learned, the order of material presentation, and/or the method of delivery, and which ideally support a wide range of learning needs or styles; also, learning designs which adjusts the presentation materials in response to the learner's knowledge or skill level.
Learning event	Any event or activity planned with the goal of learners acquiring new knowledge, gaining or improving skills or abilities, and/or changing behaviors or attitudes. A learning event will include either an enabling or a terminal objective.
Learning Object	"Any digital resource that can be used to mediate learning." (Wiley and Edwards, 2002)
LOM	See SCORM™ LOM.
Mental Models	Representations in the mind of real or imaginary situations.(Craik, 1943).
Metacognition	The process of monitoring and controlling our cognitive processes, or the process of thinking about thinking (Schwarts & Perfect, 2002)
Metadata	Descriptive information about a piece of data that is not usually visible to the user for "purposes of description, administration, legal requirements, technical functionality, use and usage, and preservation (Getty)." Metadata is designed to help locate, organize, access, and use data effectively.
Metatag	Identifies metadata.
NMETL	Naval Mission Essential Task List
NROM	Navy Reusable Object Model—a reusable object model having a primary goal to maximize the reuse, repurpose and reference (R^3) value of objects.
OJT	On the Job Training.
Performance-based outcomes	Learner outcomes that are observable with demonstrated objectives or behaviors that are based on standards.
PQS	Personnel Qualification Standards—a compilation of the minimum knowledge and skills that an individual must demonstrate in order to qualify for watch standing or perform other specific routine duties necessary for the safety, security, or proper operation of a ship, aircraft, or support system.

QTI	Question & Test Interoperability—IMS specifications that appear to be the emerging standard for ILE assessment operations.
R^3	Reuse, Repurpose, and Reference—overarching tri-fold goal for learning objects within the Navy ILE
Reuse	The reuse of an existing learning object in a new context without any modification to its instructional treatment, context, or content, and is able to "stand-alone." It can be used across communities for many different learners.
Repurpose	The reuse of an existing learning object in a new context after modifying its instructional treatment, context, or content.
Reference	A validated information source in the form of a learning object for generating ideas or simply as a resource in the similar manner that one would use a reference in a traditional development effort.
Repository	See content repository.
RIO	Reusable Instructional Object—a collection of Assets with instructional treatment applied to satisfy a single enabling objective.
RIT	Revolution in Training
RLO	Reusable Learning Object—a collection of one or more RIOs.
base RLO	Top-level RLO. Often defines the terminal objective for the learning object.
SCO	A Shareable Content Object within SCORM™ . Generally equivalent to a RIO.
SCORM™	The Sharable Content Object Reference Model (SCORM™) defines a Web-based learning "Content Aggregation Model" and "Run-Time Environment" for learning objects. The SCORM™ is a collection of specifications adapted from multiple sources to provide a comprehensive suite of e-learning capabilities that enable interoperability, accessibility and reusability of Web-based learning content.
SCORM™ CAM	SCORM™ Content Aggregation Model—describes the assembly, description, and packaging of content as SCORM™ Assets, SCOs, and higher aggregations. This task is accomplished through the creation of XML documents according to the SCORM™ meta-data requirements (LOM).
SCORM™ LOM	IMS/SCORM™ Learning Object Meta-Data (LOM)—inline XML specification for the description of aggregations of content as well as individual media. LOM meta-data provides the means for the identification retrieval and subsequent reuse of content.
SCORM™ RTE	SCORM™ Run-time Environment—technical specifications in SCORM™ for

	the content launch process, standardized communication between content and LMSs and standardized data model elements used for passing information relevant to the learner's experience with the content
SCORM™ SN	SCORM™ Sequencing and Navigation (SN)—describes how SCORM™ -conformant content may be sequenced to the learner through a set of learner or system-initiated navigation events.
Sequencing	Describes and prescribes the manner in which the learner receives content
SME	Subject Matter Expert—a person who helps to formulate or verifies domain-specific instructional content in his or her area of expertise
Task Force EXCEL (TFE)	The Task Force for Excellence through Commitment to Education and Learning (EXCEL)—body in charge of overseeing the implementation of the pilot programs designed enhance and strengthen the Navy's training and education structure.
Terminal objective	Desired final outcome (e.g., knowledge or performance-based) of the designed instruction/learning experience. Made up of enabling objectives.
TO	See terminal objective.
WBT	Web-based Training
XML	Extensible Markup Language—universal format for exchanging structured documents and data on the Web. XML uses HTML-like tags to delimit bits of data, but unlike HTML, leaves interpretation of that data to the applications that read it.

This page intentionally left blank.

APPENDIX B: SCORM™ BASICS

This page intentionally left blank.

APPENDIX C: NROM METADATA REQUIREMENTS

Some Assets require metadata while others do not[4]. In order for a single Asset to be reused, repurposed or referenced (R^3) it must have metadata so that it can be searched and found. If metadata is not attached, the single Asset cannot be included in a specific search constructed to return single Assets. However, if the intent is to reuse, repurpose, or reference a higher aggregation of Assets (i.e., RIO, RLO) then any Asset within the aggregation has R^3 potential. Assets assigned with metadata descriptions have greater R^3 potential as they may be returned as distinct, individual items by a specific search. **Within the NROM all Assets that are non-gratuitous media type files—text, graphics, images, sounds, animation, video, etc. require metadata**.

It is important to note that when metadata is assigned to an object **all** required SCORM™ metadata and respective best practices listed in the SCORM™ documentation (see www.adlnet.org) are mandatory under the NROM. The NROM metadata listed in the following table has been adapted from the SCORM™ metadata specifically for the NROM.

The required NROM metadata listed in the table is in addition to SCORM™ metadata even if SCORM™ lists the metadata as optional and/or describes the metadata differently. For example, SCORM™ states that the 5.2 and 5.7 educational tags are optional; however, the NROM states that they are mandatory according to applicable rules. Specifically, the SCORM™ 5.2 Learning Resource Type lists different tokens than what the NROM 5.2 Learning Resource Type lists—the NROM tokens supersede the SCORM™ tokens, and should be used in place of the SCORM™ 5.2 tokens. Under the NROM, the metadata elements and their respective explanations, guidelines, and rules listed in the table must be adhered to when developing ILE content.

Within the NROM metadata some tags act as parent tags while others act as child tags. It is important to understand that parent tags have no values associated with them. They act as containers for other tags—typically called child tags. Hence, if you use a child tag you must also use its parent tag. By default the grey highlighted categories (e.g., 1.0 General) listed in the table are parent tags, and their respective sub categories (e.g., 1.2 Title) are child tags. The term "object" when used in the table below refers to the Asset, RIO, or RLO—whichever is applicable.

[4]Gratuitous/incidental media type files that have little to no reuse value would not necessarily require metadata. For example, Assets such as a graphical space bar, graphical text, or a “Next” button would not necessarily require metadata.

Navy ILE NROM Metadata

Element	Explanation, Guidelines, and Rules	NROM Level - Mandatory (M) - Optional (O)			Examples and Non-examples
		A	RIO	RLO	
1.0 General	**Describes the traits of an object.** ***Note:** This tag is Mandatory at the Asset level *only if* the Asset receives metadata and/or the Asset is tagged with any of the 5.0 or 9.0 parent/child elements.	**M***	**M**	**M**	**This is the summary level element. Complete the fields below.**
1.2 Title	**Explanation:** The name given to the object. **Rules:** • 1,000 character limit. • The title must be text and must be descriptive of the Asset's content. **Guidelines:** • Typically, the object's Title will be used to help create the object's description (see 1.4 Description).	**M***	**M**	**M**	**<u>Asset Examples and Non-examples</u>:** Notice in the examples below that the word Naval describes the Correspondence Manual that is specific to the Navy, and is a necessary descriptor. **Asset Example:** Naval Correspondence Manual Table of Contents **Asset Non-example:** Table of Contents **<u>RIO Examples and Non-examples</u>:** **RIO Example #1:** How to Use the Naval Correspondence Manual **RIO Non-example #1:** Correspondence Manual **RIO Example #2:** How to Use the Standard Subject

Element	Explanation, Guidelines, and Rules	NROM Level - Mandatory (M) - Optional (O)			Examples and Non-examples
		A	RIO	RLO	
					Identification Codes Manual **RIO Non-example #2:** Codes Manual **<u>RLO Examples and Non-examples</u>:** **RLO Example #1:** Introduction to Naval Correspondence References **RLO Non-example #1:** Introduction **RLO Example #2:** Effective Naval Instructor Communication **RLO Non-example #2:** Effective Communication
1.4 Description	**Explanation:** • Provides a description of the object and allows for a narrative explanation. **Rules:** • 2,000 character limit. • The Description is not just a repeat of the 1.2 Title tag. • The Description must describe the object in enough detail for the user to determine the object's purpose. • The object's description must begin with descriptors such as: – Photo of… – Graphic of… – Animation of…(can apply to RIO and RLO) – Audio of…	**M***	**M**	**M**	**<u>Asset Examples and Non-examples</u>:** Notice in the examples below that the word Naval describes the Correspondence Manual that is specific to the Navy, and is a necessary descriptor. **Asset Example #1:** Text listing Naval Correspondence Manual Table of Contents (Asset) **Asset Non-example#1:** Table of Contents **Asset Example #2:** Text and Photo of Naval

Element	Explanation, Guidelines, and Rules	NROM Level - Mandatory (M) - Optional (O)			Examples and Non-examples
		A	RIO	RLO	
	– Video of…(can apply to RIO and RLO) – Text "describing..." – Text "describing…" and graphic of… – Form #, Name: description/purpose of form • The RLO and the RIO Description **must** describe the instruction, including instructional strategies. • The RLO Description must contain all of the instructional strategies contained in the Description of its associated RIOs. • If the "Other" attribute is used for 5.2 Learning Resource Type the 1.4 Description must include a description of "Other." • **Form Rules** – When an Asset is an actual form the description follows the format: Form #, Name: description/purpose of form – When an Asset is a visual representation of a form the description follows the format: Graphic of Form 1556.				Instructor and Student at a workbench in an OJT environment. **Asset Non-example #2:** Instructor and Student **Asset Example #3:** Form 1556 Request for Training: this form is an application for training. **Asset Non-example #3:** Form 1556 **Asset Example #4:** Graphic of a 1A1AE circuit board from an AN/SPA-25(E) Radar Repeater **Asset Non-example #4:** Graphic of a circuit board **Asset Example #5:** Animation depicting the operation of a gas turbine air uptake exhaust system **Asset Non-example #5:** Exhaust system **<u>RIO Examples and Non-examples</u>:** **RIO Example #1:** Self paced instruction about how to properly use the various sections

Element	Explanation, Guidelines, and Rules	NROM Level - Mandatory (M) - Optional (O)			Examples and Non-examples
		A	RIO	RLO	
					of the Naval Correspondence Manual. Provides preparation guidelines to ensure consistency and standardization for Naval correspondence. Instructional strategies include guided discovery, practice with feedback. **RIO Non-example #1:** Describes how to use the Correspondence Manual **RIO Example #2:** Instructor led training on how to properly use the various sections of the Standard Subject Identification Codes Manual. Defines the numeric system for coding correspondence by subject. Instructional strategies include practical problems and group problem solving activities. **RIO Non-example #2:** Codes Manual **<u>RLO Examples and Non-examples</u>:** **RLO Example #1:** Blended instruction covering resources that are needed and how to use them to ensure that

Element	Explanation, Guidelines, and Rules	NROM Level - Mandatory (M) - Optional (O)			Examples and Non-examples
		A	RIO	RLO	
					Naval correspondence is properly prepared and routed, and easily retrievable. Instructional strategy is problem-based using practical problems with modeled response, self-evaluation of problem solutions, and evaluation of provided solutions **RLO Non-example #1:** Describes Naval correspondence procedures.
1.5 Keyword	**Explanation:** Used to define common keyword(s) or phrases that describe the object. **Rules:** • 1,000 character limit. • The keyword(s) must explicitly and succinctly describe the core content, and should be written from the searcher's perspective to expedite the search process. • The Keyword tag should not include the instructional strategies that were included in the 1.4 Description tag. • *Note: This tag is Mandatory at the Asset level *only if* it is a **media** type file—graphics, images, sounds, animation, video, etc. and/or the Asset is tagged with the 5.2 Learning Resource Type tag.	**M***	**M**	**M**	**<u>Asset Examples and Non-examples:</u>** **Asset Example #1:** Naval Correspondence Manual Table of Contents, TOC **Asset Non-example #1:** This describes the Naval Correspondence Manual Table of Contents. **<u>RIO Examples and Non-examples:</u>** **RIO Example #1:** Naval Correspondence Manual, guidelines **RIO Non-example #1:** This describes the Naval Correspondence Manual guidelines, guided discovery, practice with

Element	Explanation, Guidelines, and Rules	NROM Level - Mandatory (M) - Optional (O)			Examples and Non-examples
		A	RIO	RLO	
					feedback. **RIO Example #2:** Standard Subject Identification Codes Manual, SSIC **RIO Non-example #2:** This describes the Standard Subject Identification Codes Manual, practical problems with modeled response. **<u>RLO Examples and Non-examples:</u>** **RLO Example:** Naval Correspondence Manual, procedures, guidelines, Standard Subject Identification Codes Manual, SSIC **RLO Non-example:** This describes the Naval Correspondence manual as well as the procedures and the SSIC, modeled response, guided discovery, practice with feedback.
5.0 Educational	**Describes the educational characteristics or the theories of the object.** *** Note: This tag** is **Mandatory** at the applicable NROM level ***only if*** it meets the definition of one of the Learning Resource Type's tokens.	**M***	**M***	**M***	**This is the summary level element. Complete the fields below.**
5.2 Learning	**Explanation:**	**M***	**M***	**M***	**<u>Practicum Example:</u>**

Element	Explanation, Guidelines, and Rules	NROM Level - Mandatory (M) - Optional (O)			Examples and Non-examples
		A	RIO	RLO	
Resource Type	Identifies the object's type. This tag is not free form. It allows for at least one or more token to be assigned. **At least one of the following tokens must be assigned *IF* the object meets the definition of the following tokens**: exam, self assessment, scenario, practicum, simulation and game, and other. • **Exam**— are recordable assessment events. They include recorded pre and post assessments. • **Self Assessment**— not recordable assessment events. They include practice items and self-checks. • **Scenario**—Approximates real life situations based on realistic models, can include cases, practical problems, and problem solving. • **Practicum**— An exercise that helps trainees integrate learning into their job performance. Also called a practical exercise. The exercise mirrors the requirements of the trainees' jobs and is performed either in the actual work environment or in a high fidelity simulation of the work environment. Examples of a practicum may require the trainee to trace an actual system,				Note: see Appendix J for an actual example of a practicum. **<u>Scenario Example:</u>** Note: see Appendix J for an actual example of a Scenario that is in the format of a practical exercise.

Element	Explanation, Guidelines, and Rules	NROM Level - Mandatory (M) - Optional (O)			Examples and Non-examples
		A	RIO	RLO	
	locate equipment, shadow and observe expert personnel, or observe specific aspects of an activity. Trainees may perform the exercise either under the observation of a mentor or the trainee may report back to a mentor on his or her experiences to get feedback or clarification. • **Simulation and Game**— – ***Simulation:*** A computer software program that strives to mimic a phenomenon, experience, equipment or environment that is based on reality. The simulation serves to provide the user with the opportunity for learning in a robust, motivating, and engaging environment, wherein the presentation of the material is optimized by a high degree of user interactivity, fidelity and immersion, and where context and practice are key to learning. – ***Game***: A game is a structured activity in which 1 or more participants compete within constraints of rules to achieve an objective. • **Other**—this tag allows for				

Element	Explanation, Guidelines, and Rules	NROM Level - Mandatory (M) - Optional (O)			Examples and Non-examples
		A	RIO	RLO	
	the identification of a learning resource type other than the above tokens. If this tag is chosen then the 1.4 Description tag must be used to describe the learning resource type. **Rules:** • If an object is an exam, self assessment, scenario, practicum, or a simulation and game it **MUST** be assigned the metadata applicable to the specific token. • If an object meets more than one definition of the above tokens than the object must be assigned all metadata applicable to the specific token(s). • Both the exam and the self assessment tokens cannot be assigned to the same object **Self Assessment Rules:** • Self assessment items **do not** send a score to the LMS and **are not** recordable assessment events. • They include practice items and self-checks. **Exam Rules:** • Exam items **DO** send a score to the LMS and **ARE** recordable assessment events.				

Element	Explanation, Guidelines, and Rules	NROM Level - Mandatory (M) - Optional (O)			Examples and Non-examples
		A	RIO	RLO	
	• They include recorded pre and post assessments. **Scenario Guidelines:** • Typically a scenario is an Asset, but can be a RIO or RLO if it fulfills an enabling or terminal objective, respectively • May include or be an assessment. **Practicum Rules:** • Practicum Guidelines: • A Practicum can also be called a practical exercise. Generally, they are conducted within a specific operational environment. • In general a practicum is an Asset, but can be a RIO or RLO if it fulfills an enabling or terminal objective, respectively. • May include or be an assessment. **Simulation and Games Rules:** • Simulation and Games Guidelines: • In general a simulation or a game is an Asset, but can be a RIO or RLO if it fulfills an enabling or terminal objective, respectively. • Simulation and games can be used as unique instances of practice and assessment—depending on the design intention. • May include or be an assessment.				

Element	Explanation, Guidelines, and Rules	NROM Level - Mandatory (M) - Optional (O)			Examples and Non-examples
		A	RIO	RLO	
	Other Rules: • If the Other attribute is assigned than the 1.4 Description tag must be used to identify its type.				
5.7 Typical Age Range	**Explanation:** Identifies the level of instruction/target audience for which the content was designed. Tokens include **ONLY** the following: • Apprentice • Journeyman • Master **Rules:** • **This tag** is **Mandatory** at the **Asset** level ***only if*** the Asset is tagged with the 5.2 Learning Resource Type tag. • Closed field—use only the tokens provided.	**M***	**M**	**M**	**Examples:** • Apprentice • Journeyman • Master **Non-example:** • enlisted • recruits • officers
8.0 Annotation	**Describes the use of the object and information on when and by whom the comments were created. This category enables educators to share their assessments of SCORM™ Content Model Components, suggestions for use, etc.**	**O**	**O**	**O**	**This is the summary level element. Complete the fields below.**
8.1 Entity	**Explanation:** Identifies the entity that created the annotation **Rules:** • 1,000 character limit.	**O**	**O**	**O**	**Example:** "Company X" **Non-example:**
8.2 Date	**Explanation:** Identifies the date the	**O**	**O**	**O**	**Example:** • 2004-12-12

Element	Explanation, Guidelines, and Rules	NROM Level - Mandatory (M) - Optional (O)			Examples and Non-examples
		A	RIO	RLO	
	annotation was created **Rules:** • The format of the <dateTime> element shall be represented in accordance with ISO8601:2000: – YYYY[-MM][-DD[Thh[:mm[:ss[.s[TZD]]]]]] – Where: – YYYY = four-digit year (>=0001) – MM = two-digit month (01 through 12) – DD = two-digit day of month (01 through 31) – hh = two-digit hour (00 through 23) – mm = two-digit minute (00 through 59) – ss = two-digit second (00 through 59) – s = one or more digits representing a decimal fraction of a second – TZD = time zone designator – At least the four-digit year must be present. If additional parts of the DateTime are included, the character literals "-", "T", ":" and "." are part of the character lexical representation for the <dateTime>.				• 2001-07-30T10:14:35.5+01:00 **Non-example:** • December 12, 2004 • 12-12-2004 • 12-12-04 • Dec. 12, 04 • Dec. 12, 2004
8.3 Description	**Explanation:** This field is left to the discretion of the creator. It is used to account for any additional information	O	O	O	**Example:** Object developed using NWP-3 Version 2.0.

Element	Explanation, Guidelines, and Rules	NROM Level - Mandatory (M) - Optional (O)			Examples and Non-examples
		A	RIO	RLO	
	Rules: • 1,000 character limit. **Guidelines:** • Any additional information not covered by either the required or optional metadata tags can be included here.				
9.0 Classification	**Describes the placement of an object in a given classification system.** • ***Note:** This tag is **Mandatory** at the applicable NROM level ***only if*** it meets the definition of one of the Purpose attributes.	**M***	***M**	***M**	**This is the summary level element. Complete the fields below.**
9.1 Purpose	**Explanation:** The Purpose tag is used at applicable **RLO** or **RIO** level to identify the **Educational Objective—enabling, terminal**, and, at the **Asset**, **RIO**, or **RLO** level to identify the applicable **Skill level—skill object**, **task**, **subtask**. The following attributes are used as identifiers: • educational objective: enabling • educational objective: terminal • skill level: skill object • skill level: task • skill level: subtask An object can have multiple instances of the 9.1 Purpose tag to accommodate identification of both the educational objective	**M***	***M**	***M**	

Element	Explanation, Guidelines, and Rules	NROM Level - Mandatory (M) - Optional (O)			Examples and Non-examples
		A	RIO	RLO	
	and the skill level. **Educational Objective** One of the following attributes is assigned to identify the educational objective at the applicable **RLO** or **RIO** level: • educational objective: enabling • educational objective: terminal **Educational Objective Rules** • If a RLO or a RIO satisfies either a **terminal** or **enabling** objective it must be assigned either the educational objective: enabling or educational objective: terminal tag attribute. • When an educational objective attribute is chosen to identify the **terminal** or **enabling** objective each **must also have its own instance of the 9.3 Description tag**. • Closed field—use only the tokens provided. **Skill Level** The following attributes are assigned to identify the appropriate skill level at the applicable **Asset**, **RIO** or **RLO** level: • skill level: skill object • skill level: task • skill level: subtask **Skill Level Rules** • When a skill level: task or subtask attribute is assigned to an Asset/RIO/RLO, its				

Element	Explanation, Guidelines, and Rules	NROM Level - Mandatory (M) - Optional (O)			Examples and Non-examples
		A	RIO	RLO	
	associated skill level: skill object attribute must also be assigned. • When a skill level attribute is chosen to identify the skill object, task or subtask, **each must also have its own instance of the 9.3 Description tag.** • Closed field—use only the tokens provided.				
9.3 Description	The 9.3 tag is a free form text field used to describe the assigned 9.1 attributes: • **educational objective: enabling**—a text field that follows a best practices format to describe the enabling objective of the applicable **RLO** or the **RIO**—it begins with a verb that is indicative of the level of learning • **educational objective: terminal—**a text field that follows a best practices format to describe the terminal objective of the applicable **RLO** or **RIO**—it begins with a verb that is indicative of the level of learning. • **skill level: skill object—**a text field to enter the **Asset's/RIO's/RLO's** skill object taken from the Job Task Analysis (as provided by the government furnished material).	**M***	***M**	***M**	**<u>Examples</u>** **educational objective: enabling** • Describe decontamination procedures • Determine decontamination procedures • Devise decontamination procedures **educational objective: terminal** • Evaluate conditions to implement proper action plans about chemical, biological, and nuclear decontamination for self, victims, site/equipment, and mass casualties **skill level: skill object** • workspace training administration **skill level: task** • request billets for

Element	Explanation, Guidelines, and Rules	NROM Level - Mandatory (M) - Optional (O)			Examples and Non-examples
		A	RIO	RLO	
	• **skill level: task—**a text field to enter the **Asset's**/**RIO's**/**RLO's** task taken from the Job Task Analysis (as provided by the government furnished material). • **skill level: subtask—**a text field to enter the **Asset's**/ **RIO's**/ **RLO's** subtask taken from the Job Task Analysis (as provided by the government furnished material). **Educational Objective Rules:** • 2,000 character limit. • The description of the educational objective: enabling must be assigned to either a RLO or a RIO when the **RLO/RIO** fulfills an **enabling objective**. • The description of the educational objective: terminal must be assigned to either a RLO or a RIO when the **RLO/RIO** fulfills a **terminal objective**. **Skill Level Rules:** • 2,000 character limit. • The **skill level: skill object** description must be completed for an **Asset**, **RIO**, or **RLO** when the **Asset**/**RIO**/**RLO** is associated to a skill object. • The **skill level: task** description must be completed for an **Asset**, **RIO**, or **RLO** when the **Asset**/**RIO**/**RLO** is associated to a task.				mobile and in-house classes **skill level: subtask** • establish needs of student billets

Element	Explanation, Guidelines, and Rules	NROM Level - Mandatory (M) - Optional (O)			Examples and Non-examples
		A	RIO	RLO	
	• The **skill level: subtask** description must be completed for an **Asset**, **RIO**, or **RLO** when the **Asset**/**RIO**/**RLO** is associated to a subtask. • If an Asset, RIO, or RLO is assigned the skill level: task or subtask attribute it must also be assigned the skill level: skill object attribute and respective 9.3 description tag.				

This page intentionally left blank.

APPENDIX D: JOB TASK ANALYSIS DATA AND ACCOMPANYING ISD EXAMPLE

EXAMPLE JTA DATA FOR THE APPRENTICE TRAINER COURSE

Workspace Trainer

NOTE: THIS IS PARTIAL LIST FOR DEMONSTRATION PURPOSES

* = Skill Object
** = Task

*** CLASSROOM INSTRUCTION**

** Adjust teaching Strategies to ensure class participation
Ask questions to engage conversation
Utilize role-playing techniquesto get students involved
Create scenarios for realistic application of training received

** Apply effective communication skills and techniques to the instructional environment
Understand material to be taught
Select communication method
** Conduct lectures using audio visual instructional methods
Maintain familiarization with set-up and use of equipment
Rehearse using equipment

** Relate Content to student experience
Use analogies to compare past experience
Ensure technical names and acronyms are understood

** Conduct classroom Training utilizing Instructor Guides
Obtain Instructor Guide
Follow Instructor Guide

** Assign class members to complete practice assignments
Prepare practice tasks
Create assignments
Provide guidance to class regarding steps to completion

** Instruct class how to perform tasks
Review related publications
Teach students to operate training equipment

*** POST INSTRUCTION INTERACTION**

** Acquire student feedback following completion of training
Create Critique Sheets
Distribute Critique Sheets
Collect Critique Sheets

** Identify Areas where adjustments may be needed
Review feedback received

Conduct test analysis
Create progress reports
Review progress reports
Prepare report for post-course summary and evaluation

** Provide prompt, timely and specific Feedback
Answer student questions
Obtain information to respond to student questions
Review end of course critiques

** Recommend Revisions to existing materials according to student feedback
Submit feedback reports
Submit technical publication deficiency reports

*** MENTORING**

** Encourage students to develop skills in preparation for fleet applications
Explain incentives for compliance
Explain penalties for non-compliance

** Function as a Role model for students
Lead by example
Practice responsible ethical behavior
Adhere to core values

** Guide teams or individuals toward job accomplishment
Set Goals for job completion
Demonstrate proper job accomplishment
Correct improper procedures

*** ONE-ON-ONE/SMALL GROUP INSTRUCTION**

** Adapt teaching to needs of the student
Assess needs of the student
Acquire needed material and tools to perform training

** Conduct one-on-one or small group training utilizing instructor guides
Obtain instuctor guide
Follow instructor guide

** Dispatch individuals to complete practice assignments
Prepare practice tasks
Create assignments
Provide guidance to individuals regarding steps to completion

** Instruct student how to perform tasks
Review related publications
Teach student to operate training equipment

** Lead a drill scenario
Review drill guides
Perform a safety walk through
Intiate drill

Observe drill
Critique drill

*** TESTING**

** Administer Test to assess comprehension and retention of learning objectives
Prepare test if necessary
Distribute test to students

** Conduct Re-test when student fails the initial test
Advise student of deficiencies and areas to study
Prepare second test
Distribute test
Grade test

** Evaluate work Groups in job performance
Observe job being performed
Compare to previous training evolutions
Assign grade

** Assess test results according to established guidelines
Grade tests
Compile results of test
Assess test results for problem areas in instruction

INSTRUCTIONAL DESIGN AND ASSESSMENT STRATEGY FOR THE APPRENTICE TRAINER COURSE

Because the Apprentice Trainer Course is part of the larger IDC(Instructional Delivery Continuum), the instructional design of the Apprentice Trainer Course was done in conjunction with the design of the IDC. The designer used information from a job task analysis to fully understand the job requirements of the trainee. In the case of the Apprentice Trainer Course, the designer wrote objectives based on the results of the job task analysis. As a result of understanding the job requirements, the objectives, the target audience, and the learning environment, the following instructional design was developed:

The instructional design of the Apprentice Trainer Course will be based on a guided discovery architecture. Throughout the continuum participants will engage in situations (sometimes simulated and sometimes real) in which they create and implement a solution, experience the consequences of their choices, reflect on the results, and revise their approach to instruction. This design architecture will help participants build the appropriate mental models necessary to become exceptional instructors and managers of training.

Participants will engage in a variety of learning activities where they will process information in light of their expanding knowledge base and experiences. Providing appropriate support scaffolding is a critical component of a guided discovery architecture. IDC participants will find support in a variety of elements including a combination of web-based instruction (WBT), required readings and other professional activities, practice exercises with feedback in actual performance settings, a process of self-assessment to encourage continuous improvement, and interaction with other participants in the course and the IDC continuum. Trainees will be guided by a training mentor, a senior trainer who, by sharing their own experiences and by supporting or challenging the underlying beliefs of the participant in the context of each learning experience, assists participants in generating meaningful relationships between the concepts and principles they are learning and their experiences in training.

The delivery of the Apprentice Trainer Course will be a combination of self-paced web-based training (WBT), on-the-job training, and communication within their community of practice. The WBT will be designed with practical application in mind. The WBT will not simply convey information to students. It will encourage students to think about practical application of these concepts as they engage in their own practice. A menu of practice exercises appropriate for the apprentice level will be provided to accommodate the variety of operational environments in which students will be learning. The WBT will also present students with practical problems that they can use as a vehicle to discuss learning issues with experienced instructors at their command or other continuum participants via email or other web-mediated communication. To further encourage interaction within the participant's professional community and increase the transfer of learning, learning and practice will, whenever possible, occur within the operational environment where the student has a requirement to apply these new skills.

An important professional aspect of the IDC is the development of the reflective practitioner. This means the student is always evaluating his or her own progress. An Individual Development Plan (IDP) will facilitate the development of this skill as well as the development of the participant. Core competencies from the job task analysis will be identified in the IDP, so participants have a tool to self-assess their strengths and weaknesses and help them set realistic goals throughout the continuum. As they evaluate their progress and set goals, they will identify appropriate knowledge and experiences they need to meet their developmental goals. Training mentors will assist in the IDP process.

As part of the assessment strategy, a Practice is included at the end of each topic throughout the WBT. However, Practices are not just to assess student knowledge, but to challenge students to think about how they would apply what they are learning to a situation. This will help students to make the information

they are learning meaningful to them in terms of the job they will be performing. In addition to Practices, there are Skill Tests throughout the Apprentice Trainer Course that identify specific competencies being tested, the tasks the student must complete with required mentor review and sign off, and the final skill that will be demonstrated. Students are evaluated by their mentors using an evaluation sheet. Performance is informally assessed throughout the course through practical exercises where students demonstrates skills they are learning, receiving naturalistic feedback from their own students and from their mentors. A final knowledge test is administered when the student feels they have mastered the course.

The instructional strategy includes the organization of the content by Lessons and Topics and objectives written for each. These appear in the table below for one of the seven lessons in the Apprentice Trainer Course.

Lesson Title	Topic Outline	Objective
Lesson: Becoming a Qualified Workspace Trainer		After completing this lesson, you will be able to employ strategies for enhancing your personal and professional development as a workspace trainer.
	What is an IDC Apprentice? • Common elements of training programs, including terminology and basic approach at the command, department, and divisional levels. • Instructional Delivery Continuum • Apprentice Level • Practice Items • Activity: Analyze the Command Training Structure	Differentiate between your role and responsibilities as a workplace trainer and as an apprentice in the IDC.
	What is Team Dimensional Training (TDT)? • Definition of TDT • The TDT Cycle • Practice Items	Describe the TDT cycle.
	The Primary Trainer/Apprentice Relationship • Definition and example of a learning coach • Purpose of the apprentice/learning coach relationship • Benefits of the	Describe the primary trainer/apprentice relationship.

Lesson Title	Topic Outline	Objective
	apprentice/learning coach relationship • Practice Items • Activity: Interview your primary trainer	
	What is Self-assessment? • Recognizing what you know and don't know • Recognizing when you've done something wrong • Knowing when t ask for help • Practice Items • Activity: Assess your knowledge of IDC topics	Perform a self-assessment.
	What is an Individual Development Plan (IDP)? • Definition of IDP • Purpose of IDP • Use of an IDP to manage professional development, including tracking performance and setting goals • Practice Items • Activity: Develop and review your IDP	Use your IDP to manage your professional development.
	What is Time Management? • Procrastination • Setting priorities • Time management strategies • Benefits of time management • Setting goals • Practice Items	Describe time management
	IDC Trainee Responsibilities • Take initiative for your own learning and ultimate qualification. • Seek out and interact with learning coach and peers	Describe your responsibilities as an IDC apprentice trainee

Lesson Title	Topic Outline	Objective
	• Utilize the tools and resources available • Take advantage of learning opportunities • Take the initiative to become technically proficient. • Practice Items	

This page intentionally left blank.

APPENDIX E:INSTRUCTIONAL DESIGN THEORIES

Conditions-based Theories

While there is no one learning taxonomy that has been thoroughly tested and accepted in the instructional design community, Gagne's Conditions-based Theory (different types of learning requires different types of conditions) is often used as a basis for other instructional design theories. Essentially, the Conditions-based Theory assumes that there are different types of learning and learning outcomes that can be classified and described in discrete groups primarily distinguished by the cognitive requirements of the learning and learning outcomes placed on the learner. These requirements are usually reflected in the learning objectives and can be supported by discrete instructional methods. The job of the ID is to determine the goals of instruction, categorize goals by outcome category, and select strategies that have been suggested as being effective for the category of learning outcome. These theories serve a critical foundational function in determining the overall design and more specifically, the approaches to address individual objectives within a learner-centered design.

Gagne's Five Categories of Learning Outcomes

Gagne (1988) identified five categories of learning outcomes. These outcomes represent different learning capabilities, intellectual skills, verbal information, cognitive strategy, attitudes, and motor skills. Gagne argues that there is a difference in how each outcome should be taught, particularly in terms of the kind and amount of practice required and the role of meaningful context. Gagne and Glaser (1987, in Ragan & Smith, 2004) suggest different external learning conditions be designed for the different types of learning. For example, learning intellectual skills requires learning conditions that promote retrieval of prior knowledge, guidance, demonstration of application by students, feedback to student on student performance, and periodic review of the information. Verbal information requires conditions that require students to retrieve context, allow students to demonstrate they have constructed new knowledge, and provides feedback on the students' performance. Cognitive strategies call for retrieval of context of meaningful information, increasingly difficult novel problem situations, student demonstration of their problem solutions, and feedback to students (Ragan & Smith, 2004).

Bloom's Taxonomy

Bloom's taxonomy is an early example of a conditions-based design approach and one which most IDs are familiar with. Bloom identifies three types of learning: cognitive, affective, and psychomotor. Within each is a taxonomy of learning. The cognitive taxonomy is probably the most recognizable. Cognitive learning can be categorized in the following levels: knowledge, comprehension, application, analysis, synthesis, and evaluation. Each level describes the cognitive processing that is required of the student and instructional activities should be selected according to the level at which learning has been identified. For example, if students must apply content they are learning, then

activities are built into instruction that require the learner to use the content in different ways (e.g., solving practical problems or completing a practical exercise).

Merrill's Component Display Theory

Merrill uses a content by performance matrix to classify learning outcomes. There are four content types in the matrix (facts, concepts, principles, and procedures) and three levels of performance (remember, use, and find), making twelve distinct categories of objectives. This matrix allows the ID to determine what level of performance is required for each level of content. Component Display theory also classifies presentation forms as primary or secondary. There are four Primary presentation forms—rules, examples, recall, and practice. Secondary presentation forms generally expand on the primary presentation form and include prerequisites, objectives, helps, and feedback. A combination of primary and secondary presentation forms provides the best mix to ensure the acquisition of the skills and knowledge available to meet each component in the matrix.

Learner-centered Approaches

The basis of learner-centered approaches is constructivist thinking which says that learners construct their own meaning by interpreting new experiences in context of the learning environment, what they already know, and their prior experiences. General constructivist instructional design guidelines include:

- Learning activities promote active construction of knowledge.
- Learning is situated in a relevant and realistic context for the learner.
- Different perspectives on the same issues should be presented to the learner for consideration. The same information should be provided in different contexts.
- Feedback is essential between the learner and the instructor and between learners through cooperation and collaborative activities.

Constructivist approaches are learner-centered and require the ID to create a learning event where learners interact with the content in a meaningful way to help them construct a mental model of the content. By focusing the instructional event on the process of learning rather than the product (frequently some measure of what the learner has learned), cognitive processing of the content is encouraged. Mayer (1999) identifies three primary cognitive processes the learner needs to engage in: selecting the relevant information, organizing the information, and integrating the information into existing knowledge structures.

There are many ways to engage the learner in these cognitive processing activities. Mayer (1999, p. 154) suggests the following instructional methods to engage the learner in selecting the appropriate material:

- Font changes to show organization and highlight important points
- Questions and objectives to focus attention
- Summary paragraphs prior to a reading

To help students organize material Mayer (1999, p. 154) suggests:

- Outlines
- Headings
- Text structure
- Pointing words
- Clearly identifying steps

To help students integrate material Mayer (1999, p. 155) suggests

- Advance organizers
- Illustrations and animations
- Worked-out examples
- Elaborative questions

In a constructivist learning environment, coaching and scaffolding to support learner construction of understanding is essential. Jonassen (1999) suggests that scaffolding can be integrated into instruction through the use of:

- information resources,
- collaboration tools,
- consideration of familiar and related cases,
- tools to facilitate problem solving (e.g., help learners represent or organize the problem or help them automate some aspects of the solution),
- providing hints and cues,
- tutorials,
- providing advice from experts, and
- guiding questions.

Two examples of learner-centered designs are problem-centered designs and cognitive apprenticeship. Both are briefly explained below.

Problem-centered Designs

Generally, problem-based learning requires presenting the problem scenario, forming teams (if possible), providing support for the teams' efforts, and reflecting on the results of the individuals' and teams' efforts, etc. Problem-based learning is a constructivist approach in that students construct understanding as they solve the problem. The problem and how students solve the problem drive the learning. Merrill (2002) describes four phases of effective problem-centered instruction that should be incorporated into the design:

- Activation of prior experience
- Demonstration of skills
- Application of skills
- Integration of these skills into real-world activities

Problem-based learning centers problems that are relevant and realistic to learners. All learning occurs in the context of solving this problem. The selected problem should be at an appropriate level of difficulty for the learner and subsequent problems should build in difficulty and complexity. As instruction is designed, activities must be included to promote the acquisition of essential foundational knowledge if necessary (e.g., through tutorials and demonstrations).

Reflection on the processes used by the learner is an essential part of a problem-based learning strategy (Reigeluth and Moore, 1999). Learners need to reflect on the learning process: consider the effectiveness of the problem solving process they used, how this process could be improved, how other students solved the problem and the advantages and disadvantages of those approaches, and how expert problem solvers have approached the problem. This can be accomplished by asking learners to: (Jonassen, 1999)

- list and explain their assumptions
- list and explain their problem solving strategies
- explain how and why they used a tool to solve the problem
- explain alternative responses and why these responses were not selected
- rate how confident they are in their responses

Merrill (2002) goes further to suggest principles of instruction to follow when using a problem-centered approach. Merrill presents these principles in the form of questions IDs can ask themselves as the instructional event is being designed. If the answer to these questions is "yes", then learning (and performance) is likely being promoted by the problem-based design (Merrill, 2002, p. 40):

- Is the content presented in the context of real-world problems? Are learners shown the problem, engaged at the task as well as the operation level, and involved in the progression of problems?
- Does the content attempt to activate relevant prior knowledge or experience? Are learners directed to recall relevant past experience or provided relevant experience? Are they encouraged to use some organized structure?
- Does the content demonstrate what is to be learned rather than merely telling information about what is to be learner? Are the demonstrations consistent with the instructional goals? Is learner guidance employed? Do media enhance learning?
- Do learners have an opportunity to apply their newly acquired knowledge or skill? Is the application consistent with the instructional goals, and does in involve a varied sequence of problems with feedback? Are learners provided with gradually diminished coaching?
- Does the content provide techniques that encourage learners to integrate (transfer) the new knowledge or skill into their everyday life? Do learners have an opportunity to publicly demonstrate their new knowledge? reflect on their new knowledge, and create new ways to use their new knowledge?

Cognitive Apprenticeship

Cognitive apprenticeship capitalizes on the age-old apprenticeship model to promote learning in the cognitive domain. Essentially, experts and novices interact while focused on completing a realistic, job-related task to develop essential cognitive skills. Collins et al. (1989, p. 456) define cognitive apprenticeship as “learning-through-guided-experience on cognitive and metacognitive, rather than physical, skills and processes.” There are several cognitive apprenticeship models that exist, but most share the following features (Biehler & Snowman, 1977; Clark, 1998; Hackbarth, 1996; Woolfolk, 1998).

- Many learning activities are problem-centered.
- Problems are presented in a real-world context.
- Students observe experienced personnel model job behaviors.
- Student learning is supported through mentors or coaches.
- Support to learners gradually fades as learners become more competent and proficient.
- Students continually articulate what they are learning.
- Students reflect on their progress toward developing expert-like cognitive structures.

- Students observe and make their own errors in the real world environment and receive naturalistic feedback.

These features suggest that a blending of methods (beyond computer-based) be incorporated into a cognitive apprenticeship design including:

- Learners shadow Subject Matter Experts (SMEs) during their normal work routine
- SMEs articulate their thinking to learners as they solve a problem
- Learners use a checklist to identify specific behaviors, steps, or tasks, as they observe a SME completing a task
- Learners perform a task under instruction, being allowed to succeed or fail as appropriate (and safe) to gain naturalistic feedback
- Learners talk to several SMEs to gain their perspective on solving a real-world problem.
- Learners discuss what they are learning with a SME

Other constructivist based design theories include anchored instruction (Bransford et al., 1990), Goal-Based Scenario's (Schank, Fano, Bell, & Jona, 1993), and the Four Component Instructional Design Model (van Merriernboer, 1997). No one theory is the best choice all the time, IDs must ask themselves when does each theory work best and what theory, or combination of, is appropriate for the instructional event being designed, taking into account all of the variables affecting instructional design decisions (e.g., audience, learning location, content, and requirements of the job).

Performance-based Approach

Regardless of the instructional design theory (or theories) employed, the resulting instructional design should emphasize a performance-based approach. Of course, the reason for training is to better prepare learners for their jobs. This requires that IDs go beyond helping the learner to acquire knowledge, and address job performance requirements. There is likely to be a wealth of knowledge learners must know to do their jobs, but they must learn the knowledge in the context of performance. How will the learner use this information? Why do they need to know this? How does it help them do their jobs better? How can job performance be integrated into the instruction?

To integrate job performance issues into the design of the instructional solution, performance objectives must be carefully written to go beyond just the information learners need to do their jobs. Ideally, performance objectives will be based on the tasks of a job. IDs are trained to write objectives based on the information learners must acquire (which is usually based on a job task analysis) and create instruction to make sure learners get that information (Mager, 1997). Often, the "performance" part of a "performance objective" requires the student to answer a test question correctly.

However, IDs have to take performance farther than simply selecting the correct answer on a test. Performance should address *job performance*. How will the student use the information they are learning? How will they apply it on the job? How will we know they can apply it correctly on the job? The answers to these questions must be reflected in the design of the learning solution created for the Navy's ILE.

For example, an OS may be able to perform calculations to plot the ship's course on a maneuvering board, but they also need to understand how what they are doing works in relation to the other jobs on the bridge. The OS receives information from several stations and must report information to several stations. Teaching situational awareness is much different than teaching how to perform calculations. And, how is this aspect of performance tested? All learning activities should support this approach. Another example is the use of gaming. If a game is integrated into the learning event, then the cognitive processing required to play the game should mirror those required by the job.

The ID must find ways to integrate job-specific tasks into the design of the learning event. Not everything must be learned on the computer. Activities can be designed to get the student away from the computer and actually applying the information they have just learned. A practical exercise takes students into the operational environment where they can see how what they are learning is applied. For example, students may be asked to observe an evolution with the important aspects of the evolution pointed out to them, complete a procedure under instruction, or talk to an expert and get a tour or explanation of a specific procedure. In most Navy operational environments, there will be mentors to provide students with the required feedback on practical exercises, and the naturalistic feedback they receive while on the job is valuable. A practical problem is a short scenario that represents real-world situations students may not normally find themselves in, but are real enough that students should be prepared to solve. Practical problems provide students an opportunity to apply what they are learning in a problem situation where the answer is not always obvious and there may not be one single acceptable solution. Students should talk over their answers with experts or mentors in the respective fields to get feedback on their solutions, and they should probe experts for their approach to solving the problem.

This page intentionally left blank.

APPENDIX F: MECOGNITIVE STRATEGIES

Instructional Methods for Promoting Better Metacognitive Skills

The following methods can be included into the instructional design of an ILE learning event to promote the development of metacognitive skills. Including this list in this document is not meant to imply that all methods must be used or that these are the only methods to choose from. There are many methods, and as with all instructional strategies and methods, their application is dependent on the learning situation. Information about the learners, performance requirements, and learning environment should all be considered when selecting methods to promote metacognitive skills.

- Help students focus their attention on important elements. Use highlights, bullets and other features to highlight important points.
- Students create a graphic organizer for themselves (or it could be provided to them) to help structure topics and subtopics or organize information for effective and efficient storage and retrieval.
- Students engage in activities that enable them to process information in a deep and meaningful way. Students should process the information in a manner that is consistent with the way they will process it on the job. For example, if they need to apply the concept of hydraulics in many different situations a problem solving exercise requiring that understanding may be more appropriate than a game to see if they can spell the word correctly. These activities are particularly important for novices or students with poor metacognitive skills.
- Students compare the new information to what they already know – how is it alike or different? How does this change what they know and what they are doing on the job?
- Students describe their problem solving process. Have them compare their process to that of a student who used a different process.
- Students solve a problem then compare their problem solving process to that of an expert.
- Students create outlines, flow charts, or summaries of portions of the content.
- Students put meaning of the content into their own words (e.g., paraphrase).
- Encourage students to create a mnemonic for specific information.
- Provide opportunities for student to check their understanding of the material in ways other than the end of unit tests. Pre-tests are particularly important in helping students assess their knowledge, make good decisions about what material to study, and create appropriate learning goals prior to study.
- Students consider what they learned from the activity (e.g., how they might use what they learned in their jobs) and articulate it to a mentor or fellow student.

- Provide students with an Individual Development Plan (IDP) to help them evaluate their progress and set goals. It is Important for students to learn to identify a goal, intentionally implement a strategy to meet that goal, monitor progress toward the goal, and recognize when they have achieved the goal.

Learner Control

Learners' metacognitive skills should be considered when making decisions regarding the strategy for learner control of an instructional event. Learners may control how fast they progress through instruction, the path they take through the learning event, or what support tools they decide to accesses. Learners generally prefer to have full control over their instructional options but often don't make good judgments about their instructional needs (Schnackenberg, Sullivan, Leader, and Jones, 1998 as cited in Clark, 2003). Learners who are new to the content and/or have poor metacognitive skills have more difficulty in high learner-controlled learning environments than learners with good metacognitive skills. (Clark, 2003).

Decisions concerning the navigational design of a learning event can greatly impact the success of the instruction. Although learners report more satisfaction when they maintain control, it is important for the ID to consider all of the tradeoffs of learner control, including the prior knowledge and metacognitive skills of the target learners, the cost of designing learner-controlled instruction, and the criticality of the skills being taught.

Clark (2003) makes the following recommendations regarding design for learner control:

- Use learner control for learners with extensive prior knowledge or good metacognitive skills and/or in lessons or courses that are advanced rather than introductory (learners will have more knowledge of the content in advanced lessons).
- Design the default navigation to lead to important instructional elements, otherwise, learners may decide to skip them.
- Advise learners on how to proceed based on their responses to test questions to help learners make effective instructional decisions.
- Use links sparingly to supplement a lesson. Links should not be an essential instructional element, as learners may decide not to access them. Also, limit the number of links. Having to select a link and relate the information to the main content may increase learners' cognitive load and negatively impact learning.
- Allow learners to control the pacing of instruction.
- Use course maps to provide an overview and orient learners

This page intentionally left blank.

APPENDIX G: CHARACTERISTICS OF GOOD ASSESSMENT PRACTICES

Characteristics of Good Assessment Practices

Within the NROM the connection between learning events and assessment must be aligned so that instruction can be customized for the learner and support flexibility of sharable content objects. The following overarching characteristics guide the development of all types of assessments for the NROM. Assessments should:

- Be ongoing and integral to the instructional process
- Measure intended outcome, competencies, or mission capabilities
- Be consistent with the learning system and performance goals
- Utilize what we know about the science of learning
  - Develop deep foundation of factual knowledge and strong conceptual frameworks
  - Promote transfer of learning
  - Promote development of mental models
- Provide feedback to learner, instructor, supervisor, course/content manager
- Use methods that match the objectives or intended learning outcomes.
  - Use multiple methods and technologies to emulate or approximate desired performance
  - Select from the array of strategies and methodologies to support the intended outcome
  - Optimize available strategies and techniques to provide feedback
- View technology as an enabler, not a focus
- Incorporate strategies to assess Individuals and teams
- Promote development of metacognitive skills by providing learners with information to facilitate self-monitoring and self-regulation (e.g., strategies to guide learners in examining their processes for problem solving or their strategies for achieving goals).
- Represent essential elements of domain in question (e.g., concepts, definitions, and principles that indicate the learner understands or can apply content).
- Contain adequate sampling of items or tasks that are representative of the content domain to be assessed.

(Based on Gronlund, 1988; Donovan, Bransford, &Pellegrino, 2000; Nitko,1996; Pellegrino, Chudowsky, & Glaser, 2001).

This page intentionally left blank.

APPENDIX H: NROM EXAMPLES AND MODELS OF CONTENT SEQUENCING

NROM Examples and Models of Content Sequencing

Each example section includes an introduction of the example, a content structure diagram representing the example, and the instructional strategy and sequencing rules for the example. The rules are presented in both non-technical language (called Behavior to describe what you want the learner to experience) and technical language (called SCORM™ Function to describe what will be coded to enable the behavior).

IDs can follow the Behaviors in the examples provided, and developers and programmers can follow the SCORM™ Functions to program the sequencing commands specified by the ID. In some instances, the SCORM™ Function says "No Unique SCORM™ Function" for the programmers. This occurs because the ID specifies a behavior that is either internal to the RIO or is not impacted by SCORM™ . Several examples include multiple applications of the rules so you will understand that identical content structure diagrams (or courses, lessons, etc.) can be sequenced in numerous ways.

In this document and in the sequencing rules, we refer to halting the learning in training and requiring manual intervention by the instructor. You might want to use this type of an instructional strategy if you need to prevent the learner from seeing additional content because they

1) require face-to-face interaction with an instructor to ensure they have grasped the material,
2) need assistance beyond that which is available in the remaining content, or
3) will be unable to understand the remaining content without a strong understanding of the content they have completed.

You can accomplish this by creating rules that result in the learner being prevented from seeing any RIO. The way in which manual intervention is implemented will vary by LMS; it is not specified by SCORM™ , so ensure that you carefully test this functionality before using it.

Example 1: Single RIO

This is the most basic NROM structure. A base RLO contains a single RIO. The RIO may be any size and have any amount of intra-RIO branching or an assessment. This RIO contains one Asset.

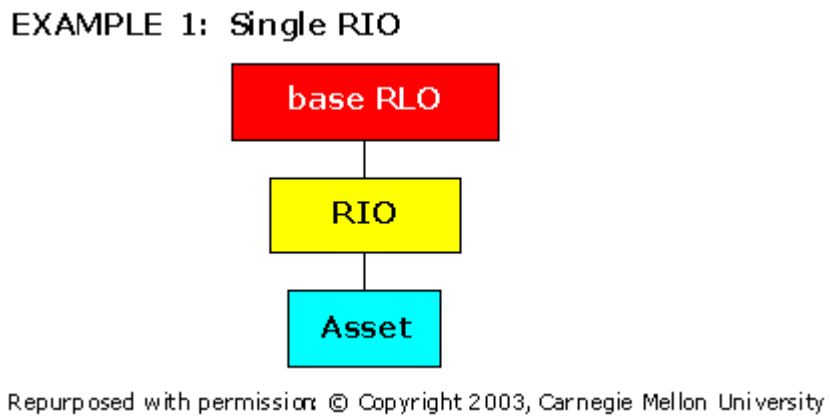

Example 1 Rules:	
Behavior	**SCORM™ Function**
1. To complete the base RLO, the learner must complete the RIO.	base RLO Rollup: If All Satisfied, satisfied.

Example 2: RIO with Assets

This example represents a RIO composed of multiple “pages” of assets. The RIO in this example might represent a course comprised of several lessons and an assessment. If you have no instructional requirement to track the learner’s performance in each of the individual lessons (the Assets), then creating your lessons as Assets within a single RIO may meet all of your reusability needs. Within this RIO, the presentation of the Assets does not impact SCORM™ in any way.

Example 2 Rules:	
Behavior	**SCORM™ Function**
1. To complete the base RLO, the learner must complete the RIO.	base RLO Rollup: If All Satisfied, satisfied.
2. To complete the RIO, the learner must complete the assessment in Asset-4 within the RIO.	*No SCORM™ function*

EXAMPLE 2: RIO with Assets

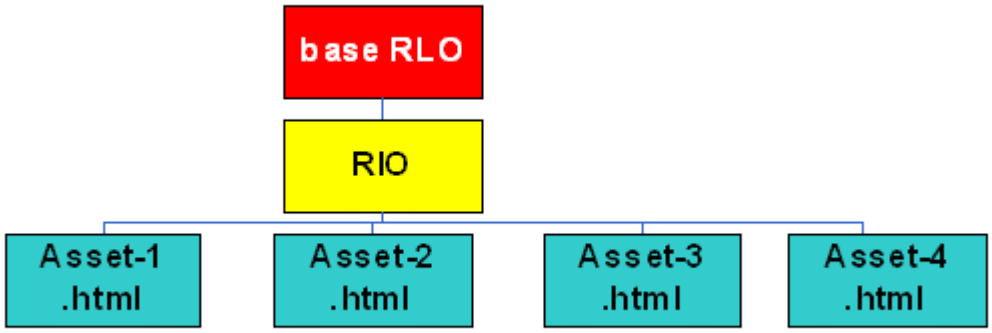

Repurposed with permission © Copyright 2003, Carnegie Mellon University

Example 3: The Black Box

Example 3 contains *no sequencing*. It is a single RIO with intra-RIO branching. The intra-RIO branching may be as complex or as simple as the ID defines. With this type of intra-RIO branching, the LMS does not know what happens inside the RIO. This means the LMS cannot track or report the learner's progress through the content. While this is an effective way to control the learner's instructional experience, it does not permit the flexibility SCORM™ seeks to provide.

EXAMPLE 3: The Black Box

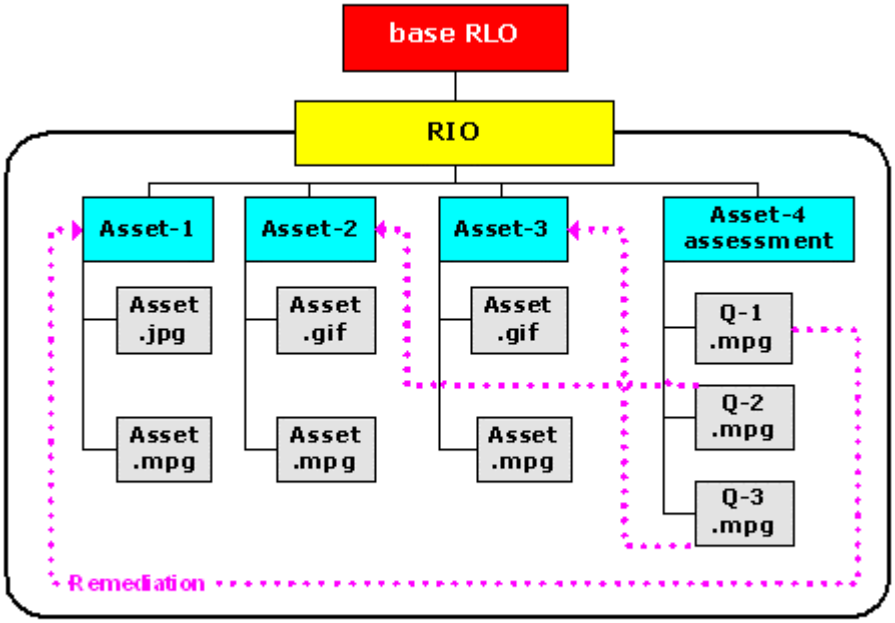

All remediation occurs as intraRIO branching, so there is no impact to interRIO sequencing.

Repurposed with permission © Copyright 2003, Carnegie Mellon University

This example could be viewed as a CBT lesson packaged as a single RIO. None of the behaviors occurring inside the "black box" is tracked by the LMS. To complete the "lesson," the learner must receive a score of 100% on the assessment. The learner is remediated from the missed question to the corresponding asset (if Q-1 is missed, the learner remediates to Asset-1, etc.). The learner is allowed two attempts. If the learner fails attempt two, the learner receives the correct answer, and the RIO is marked as passed. Again, this example does not require SCORM™ sequencing, so these behaviors are not described in the table below.

Example 3 Rules:	
Behavior	**SCORM™ Function**
1. To complete the base RLO, the learner must complete the RIO.	base RLO Rollup: If All Satisfied, satisfied.

Example 4: Multiple RIOs with Assets

As you saw in the diagrams in 4.2.2 Preparing to Sequence Your Content, you can view a RIO, a RLO, or a base RLO as any "traditional" instructional design component such as a lesson, a module, a unit, a segment, or a course. As a result, you could use Example 4, or any other example in this guide, in several different ways. Example 4 shows two RIOs in an base RLO. Here are some of the ways you could interpret the content structure diagram in Example 4:

1) Two assessed learning objectives (the RIOs) in a lesson (the base RLO)
2) Two assessed segments (the RIOs) in a lesson (the base RLO)
3) Two assessed lessons (the RIOs) in a module (the base RLO)
4) Two assessed modules (the RIOs) in a course (the base RLO)
5) Two assessed lessons (the RIOs) in a course (the base RLO)
6) Two assessed units (the RIOs) in a course (the base RLO)

RIO-2 in Example 4 is identical to the RIO in Example 2, showing how these examples can be overlaid to create additional functionality or complexity in a given structure. So, with the ability to "equate" SCORM™ structures to the traditional instructional design components you are accustomed to working with, and the ability to overlay the examples in this guide, you can essentially create limitless structures of your own.

The rules provided in Application A of Example 4 provide designer-controlled learning while the rules in Application B allow for more learner control of the experience. The set of rules you choose to apply to any example will depend on the learner experience you

are trying to create as well as the tracking and training documentation requirements you have.

EXAMPLE 4: Multiple RIOs with Assets

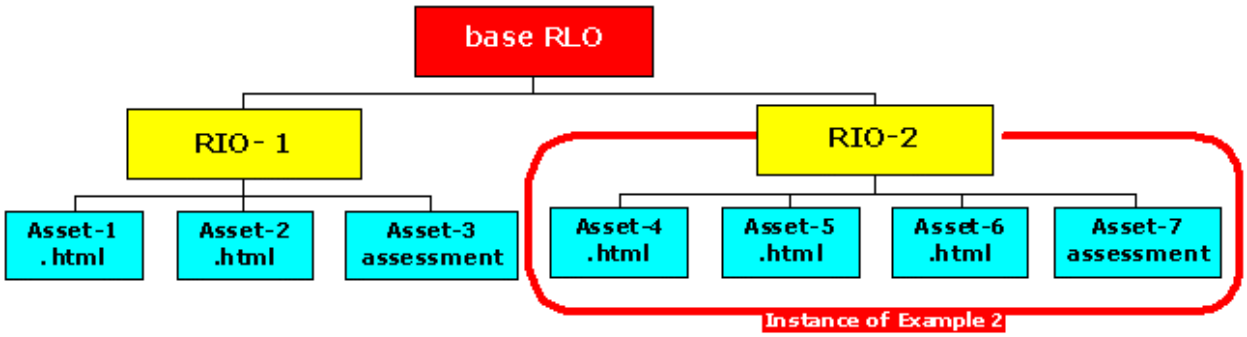

Repurposed with permission © Copyright 2003, Carnegie Mellon University

Example 4 Rules *(Application A)*:	
Behavior	**SCORM™ Function**
1. To complete the base RLO, the learner must complete RIO-1 and RIO-2	base RLO Rollup: If All Satisfied, satisfied.
2. To complete each RIO, the learner must complete the assessments within the RIOs.	*No SCORM™ function*
3. The learner cannot start RIO -2 until RIO -1 is complete.	RIO-1: Choice=false; Flow=true
4. The learner can return to RIO -1 from RIO -2 at any time.	base RLO: Forward Only=false

Example 4 Rules *(Application B)*:	
Behavior	**SCORM™ Function**
1. To complete the base RLO, the learner must complete RIO-1 and RIO-2.	base RLO Rollup: If All Satisfied, satisfied.
2. To complete each RIO, the learner must complete the assessments within the RIOs.	*No SCORM™ function*
3. The learner can view the RIO sin any order.	base RLO: Choice=true; Flow=true

Example 5: Remediating Using Objectives

Example 5 presents a sequencing option for learner remediation when you have multiple instructional RIOs. This inter-RIO remediation is tracked by the LMS using objectives (OBJs). The test for this structure exists as a single RIO with two test items (the Assets). The post-test (RIO-3) uses objectives to link each test item to its corresponding instructional RIO. Based upon the learner's response to the test item, the OBJ for that item is set to *passed* or *failed*. For failed objectives, the LMS shows the learner the list of corresponding instructional RIO and the learner can select the RIO to view the remediation.

Suppose the learner fails OBJ-1 and passes OBJ-2. Once the post-test in RIO-3 is complete, the LMS would show the learner the RIOs that **should** be seen again in order for the learner to retake the post-test. In this example, the learner would only see RIO-1 (the RIO corresponding to OBJ-1) listed in the LMS since the learner passed the objective for RIO-2. The learner should then select RIO-1 to complete the remediation and retake the post-test. In the rules, we allowed the learner two attempts to complete this base RLO. Once the learner passes RIO-3, the base RLO is complete. See Example 5 Rules *(Application A)* for specific details.

EXAMPLE 5: Remediating Using Objectives

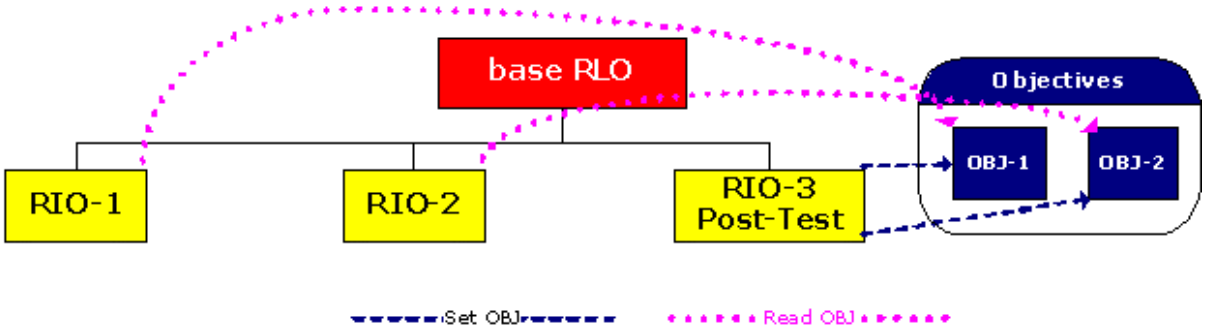

Repurposed with permission: © Copyright 2003, Carnegie Mellon University

Example 5 Rules *(Application B)*:	
Behavior	**SCORM™ Function**
1. To complete the base RLO, the learner must pass the post-test in RIO-3.	base RLO Rollup: If All Satisfied, satisfied. RIO-1: isRolledup=false RIO-2: isRolledup=false RIO-3: isRolledup=true
2. The learner must complete RIO-1 before attempting RIO-2. The learner must complete RIO-2 before attempting RIO-3.	base RLO: Choice=false; Flow=true
3. To complete RIO-3, both objectives must be passed.	*No unique SCORM™ function*
4. If the learner fails OBJ-1 in RIO-3, then present RIO-1.	RIO-3: set OBJ-1 RIO-1: skip if OBJ-1 satisfied
5. If the learner fails OBJ-2 in RIO-3, then present RIO-2.	RIO-3: set OBJ-2 RIO-2: skip if OBJ-2 satisfied
6. Allow two attempts for RIO-1, RIO-2, and RIO-3.	RIO-1, RIO-2, RIO-3: Attempt Limit=2
7. If the learner fails RIO-3 on attempt 2, the learner is halted in training and requires manual intervention.	*No unique SCORM™ function*

Some examples can be applied in different ways using different behaviors. In Example 5 Rules *(Application B)*, we've given the learner more control over the learning experience. The learner now has the choice to view the content in any order. The learner could even complete the post-test in RIO-3 without first viewing RIOs 1 and 2. The objectives and remediation work the same way in Application B as they do in Application A; however, the learner is now permitted as many attempts as needed to pass the post-test in RIO-3. The table below, Example 5 Rules *(Application B),* has specific details.

Example 5 Rules *(Application B)*:	
Behavior	**SCORM™ Function**
1. To complete the base RLO, the learner must pass the post-test in RIO-3.	base RLO Rollup: If All Satisfied, satisfied. RIO-1: isRolledup=false RIO-2: isRolledup=false RIO-3: isRolledup=true
2. The learner can complete the RIOs in any order.	base RLO: Choice=true; Flow=true
3. If the learner fails OBJ-1 in RIO-3, then present RIO-1.	RIO-3: set OBJ-1 RIO-3: skip if OBJ-1 satisfied
4. If the learner fails OBJ-2 in RIO-3, then present RIO-2.	RIO-3: set OBJ-2 RIO-2: skip if OBJ-2 satisfied
5. Allow as many attempts as needed to complete RIO-3.	*No unique SCORM™ function*

Example 6: Pre- and Post-Test Sequencing

This example presents a sequencing option for pre- and post-tests of learner knowledge or skills. The pre- and post-tests for this structure exist as individual RIOs. Each post-test item is an individual asset. The testing RIOs are linked to objectives that correspond to test items within the RIOs. Based upon the learner's response to the pre-test item, the OBJ is either set to *passed* or *failed*. When the pre-test in RIO-1 is completed, the LMS shows the learner the RIOs corresponding to the missed test questions so the learner can complete the instruction before taking the post-test.

Suppose the learner passes both pre-test items in RIO-1. OBJ-1 and OBJ-2 would be set to passed. The learner then has the choice to either skip or complete the instructional RIO (RIO-2 and RIO-3). However, the learner is required to pass the post-test, so once the pre-test OBJs (OBJ-1 and OBJ-2) are *passed*, the post-test (RIO-4) becomes available to the learner.

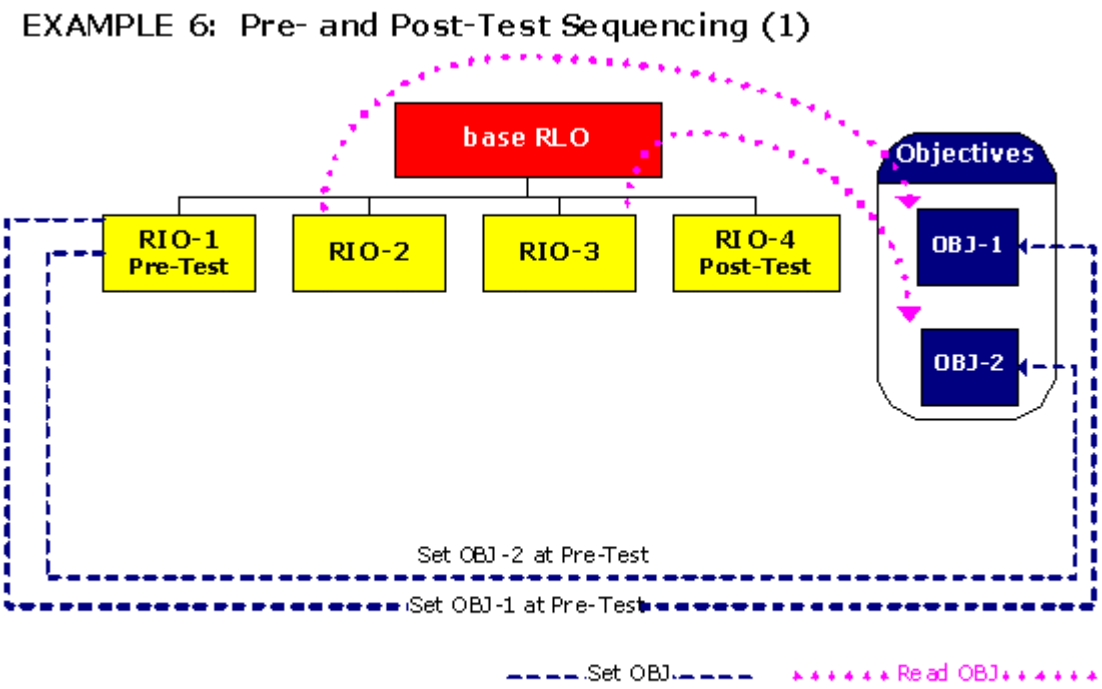

Repurposed with permission: © Copyright 2003, Carnegie Mellon University

To further expand upon the use of objectives in this example, suppose the learner fails a pre-test item in RIO-1. OBJ-1 (used as a variable) would be set to *failed*, and the LMS would show the learner RIO-1 (the corresponding instruction). Once the learner completed the instructional content in RIO-1, the learner would be able to take the post-test.

Example 6 Rules:	
Behavior	**SCORM™ Function**
1. To complete the base RLO, the learner must pass the post-test in RIO-4.	base RLO Rollup: If All Satisfied, satisfied. RIO-1: isRolledup=false RIO-2: isRolledup=false RIO-3: isRolledup=false RIO-4: isRolledup=true
2. The learner must complete the pre-test in RIO-1 before attempting RIO-2 or RIO-3.	base RLO: Choice=false; Flow=true
3. The learner can return to RIO-1 from RIO-2 at any time.	base RLO: Forward Only=false
4. If the learner fails OBJ-1 in RIO-1, then present RIO-2.	RIO-1: set OBJ-1 RIO-2: skip if OBJ-1 satisfied
5. If the learner fails OBJ-2 in RIO-1, then present RIO-3.	RIO-1: set OBJ-2 RIO-3: skip if OBJ-2 satisfied
6. To complete RIO-4, both test items must be passed.	*No unique SCORM™ function*
7. If the learner fails RIO-4, then the learner is halted in training and requires manual intervention.	*No unique SCORM™ function*

Example 7: Pre- and Post-Test Sequencing (2)

Example 7 shows a simple way to construct a pre- and post-test “course” (the base RLO) without remediation. The pre-test sets the objectives (OBJ-3 and OBJ-4) to *passed* or *failed* depending upon the learner’s response to the individual test items. If you assume the learner fails OBJ-3 in the pre-test, then the learner would be presented with a list in the LMS showing RIO-3. The learner would select RIO-3 to view the instruction that was not passed in the pre-test. The rules for the diagram require the learner to master the post-test by passing both OBJ-1 and OBJ-2.

EXAMPLE 7: Pre- and Post-Test Sequencing (2)

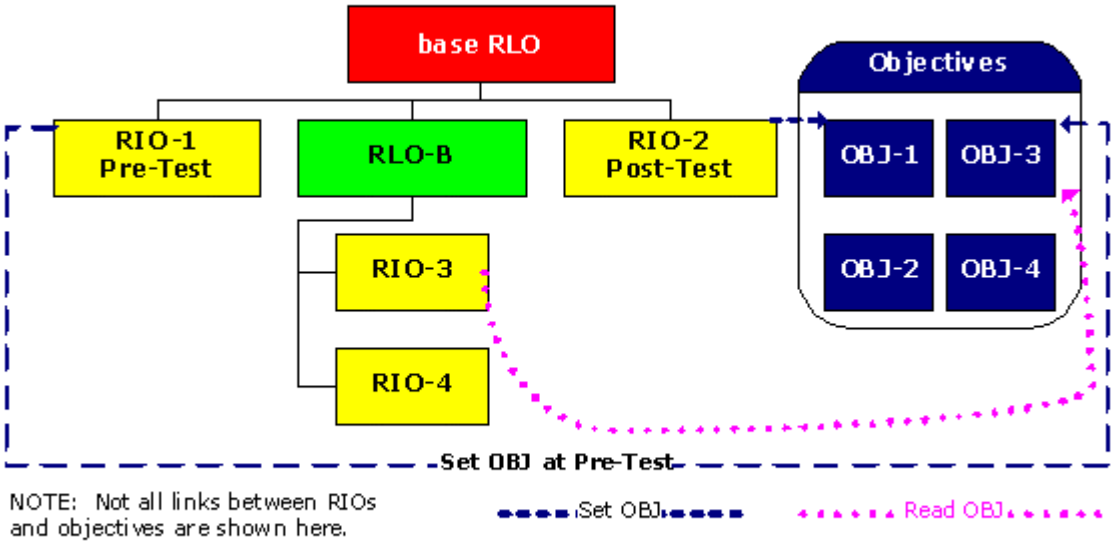

Repurposed with permission © Copyright 2003, Carnegie Mellon University

Example 7 Rules:	
Behavior	**SCORM™ Function**
1. To complete the base RLO, the learner must pass the post-test in RIO-2.	base RLO Rollup: If All Satisfied, satisfied. RIO-1: isRolledUp=false RLO-B: isRolledUp=false RIO-2: isRolledUp=true
2. The learner must complete the pre-test in RIO-1 before attempting RLO B or RIO-2.	RIO-1: Choice=false; Flow=true
3. The learner can return to RIO-3 from RIO-4 at any time.	RLO-B: Choice=true; Flow=true; Forward Only=false
4. If the learner fails OBJ-3 in RIO-1, then present RIO-3.	RIO-1: set OBJ-3 RIO-3: skip if OBJ-3 satisfied
5. If the learner fails OBJ-4 in RIO-1, then present RIO-4.	RIO-1: set OBJ-4 RIO-4: skip if OBJ-4 satisfied
6. The learner cannot return to RIO-1 or RIO-2 once RLO-B is attempted.	base RLO: Flow=true; Forward-Only=true; Choice=false
7. To complete RIO-2, OBJ-1 and OBJ-2 must be passed.	*No unique SCORM™ function*
8. If the learner fails OBJ-1 or OBJ-2, then the learner is halted in training and requires manual intervention.	*No unique SCORM™ function*

Example 8: Remediating Using Objectives (2)

Example 8 allows you to control when the learner can access the post-test. In this example, the learner cannot attempt the post-test in RIO-3 until the instruction in RLO-1 is complete. If the learner fails either objective in the post-test, the learner will be remediated to the corresponding instructional materials in RLO-1.

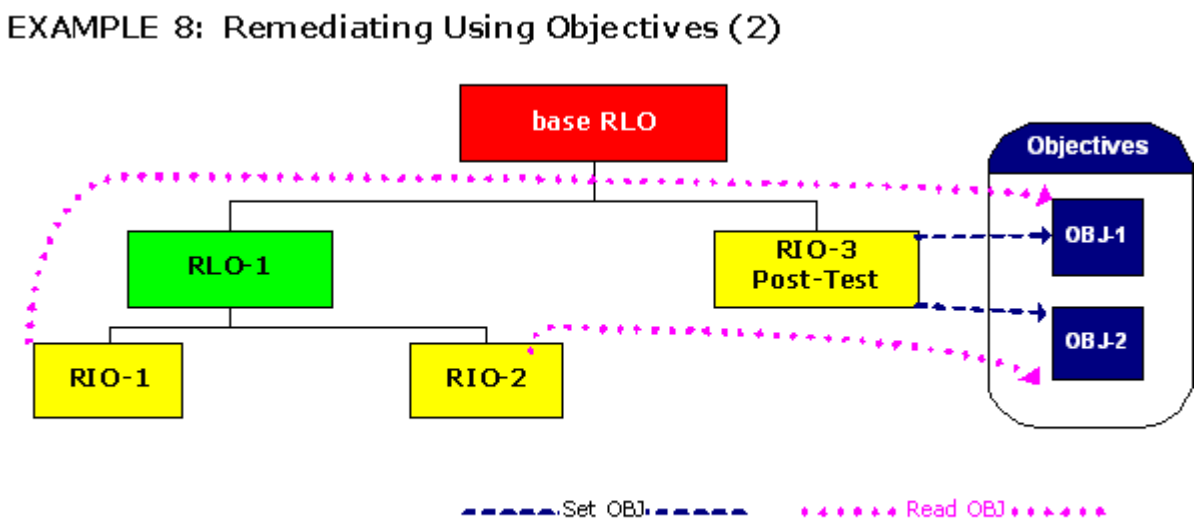

Repurposed with permission: © Copyright 2003, Carnegie Mellon University

Example 8 Rules:	
Behavior	**SCORM™ Function**
1. To complete the base RLO, the learner must pass the post-test in RIO-3.	base RLO Rollup: If All Satisfied, satisfied. RLO-1: isRolledup=false RIO-3: isRolledup=true
2. The learner must complete RLO-1 before attempting RIO-3.	base RLO: Flow=true
3. The learner can return to RIO-1 from RIO-2 at any time.	RLO-1: Forward Only=false
4. To complete RIO-3, both objectives must be passed.	*No unique SCORM™ function*
5. If the learner fails OBJ-1 in RIO-3, then present RIO-1.	RIO-3: set OBJ-1 RIO-1: skip if OBJ-1 satisfied
6. If the learner fails OBJ-2 in RIO-3, then present RIO-2.	RIO-3: set OBJ-2 RIO-2: skip if OBJ-2 satisfied
7. Allow two attempts for RIO-1, RIO-2, and RIO-3.	RIO-1, RIO-2, RIO-3: Attempt Limit=2
8. If the learner fails RIO-3 on the second attempt, then halt the learner in training and require manual intervention.	*No unique SCORM™ function*

Example 9: Basic Three-Way Branching

Example 9 shows how you can use simple sequencing rules to accomplish basic adaptive inter-RIO sequencing that is similar to the branching you might have used in traditional CBT lessons. Based upon the learner's choice or decision, represented as a normalized score between –1 and +1, the learner would be directed to another RIO.

Suppose your "course" (the base RLO) is an adaptive scenario that teaches customer service skills. RIO-1 is the introductory scenario. After reading or viewing the scenario

(RIO-1), the learner must make a decision about how to handle the situation with a particular customer. The learner chooses Choice B, which sets the RIO score for RIO-1 to 0.5. Based on the 0.5 RIO score, the learner is directed to RIO-3 for further instruction. This example could be replicated to create as many learner decision points as you desire. For more information on replicating the example, see Model 4. The rules for Example 9 (*Applications A* and *B*) have the same behaviors, but show two alternatives for programming the behaviors.

EXAMPLE 9: Basic Three-Way Branching

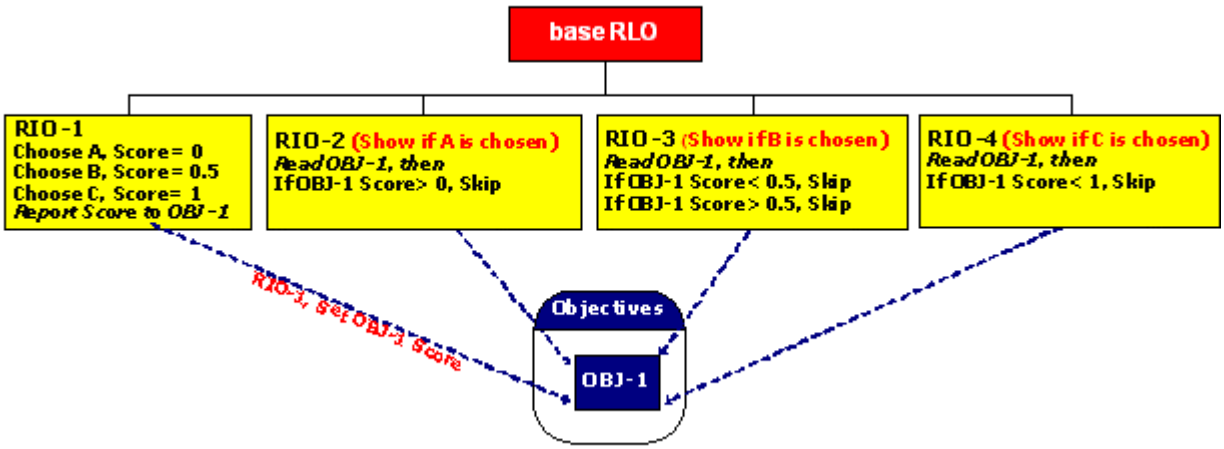

Repurposed with permission © Copyright 2003, Carnegie Mellon University

Example 9 Rules *(Application A)*:	
Behavior	**SCORM™ Function**
1. To complete the base RLO, the learner must pass two RIOs (RIO-1 and the *one* other RIO that is chosen by the sequencer). Rule 2 will ensure that RIO-1 is one of the two that is completed.	base RLO: Completed if at least two children completed
2. The learner must do RIO-1 first.	base RLO: Flow=true; Forward Only=true
3. Based on the learner's performance on the pre-test, branch to only one of the other three RIOs.	base RLO: Choice=false RIO-1: set OBJ-1 RIO-2: skip if OBJ-1.score > 0 RIO-3: skip if OBJ-1.score < 0.5 or OBJ-1.score > 0.5 RIO-4: skip if OBJ-1.score < 1

Example 9 Rules *(Application B)*:	
Behavior	**SCORM™ Function**
1. To complete the base RLO, the learner must pass two RIOs (RIO-1 and the *one* other RIO that is chosen by the sequencer).	base RLO: At least two completed, completed
2. The learner must do RIO-1 first.	base RLO: Flow=true; Forward Only=true
3. Based on the learner's performance on the pre-test, branch to only one of the other three RIOs.	base RLO: Choice=false RIO-1: set OBJ-2, OBJ-3, OBJ-4 RIO-2: skip if OBJ-2 satisfied RIO-3: skip if OBJ-3 satisfied RIO-4: skip if OBJ-4 satisfied

Example 10: Pre- and Post-Test Sequencing with New Content for Remediation

Example 10 provides a more complex pre- and post-test structure that enables learners to remediate to content that is hidden until needed for remediation. Both the pre- and post-tests are required. Based on the learner's responses to the pre-test in RIO-A, OBJ-1 and OBJ-2 will be set to *passed* or *failed*. Assume the learner fails OBJ-2. A typical LMS will then show RIO-2 on a list. The learner will choose RIO-2 and then take a post-test (RIO-C) to ensure they understand the content from both RIOs 1 and 2. If the learner passes both OBJ-3 and OBJ-4 from RIO-C, then the learner will complete RLO-B, thereby completing the base RLO.

Assume the learner failed OBJ-4 in RIO-C. The LMS will present the learner with RIO-4. RIO-4 contains new instructional material (remediation) that is an enhancement of the content from RIO-2. Since the learner initially struggled with the content, and the learner is required to master the content, the learner must now pass the post-test in RIO-B to complete the base RLO. If the learner fails RIO-B, then the learner will be halted in training according to these rules. (You could also structure the rules such that the learner passed after a defined number of attempts.) If the learner passes the post-test in RIO-B, then the base RLO is considered complete.

EXAMPLE 10: Pre- and Post-Test Sequencing With New Content for Remediation

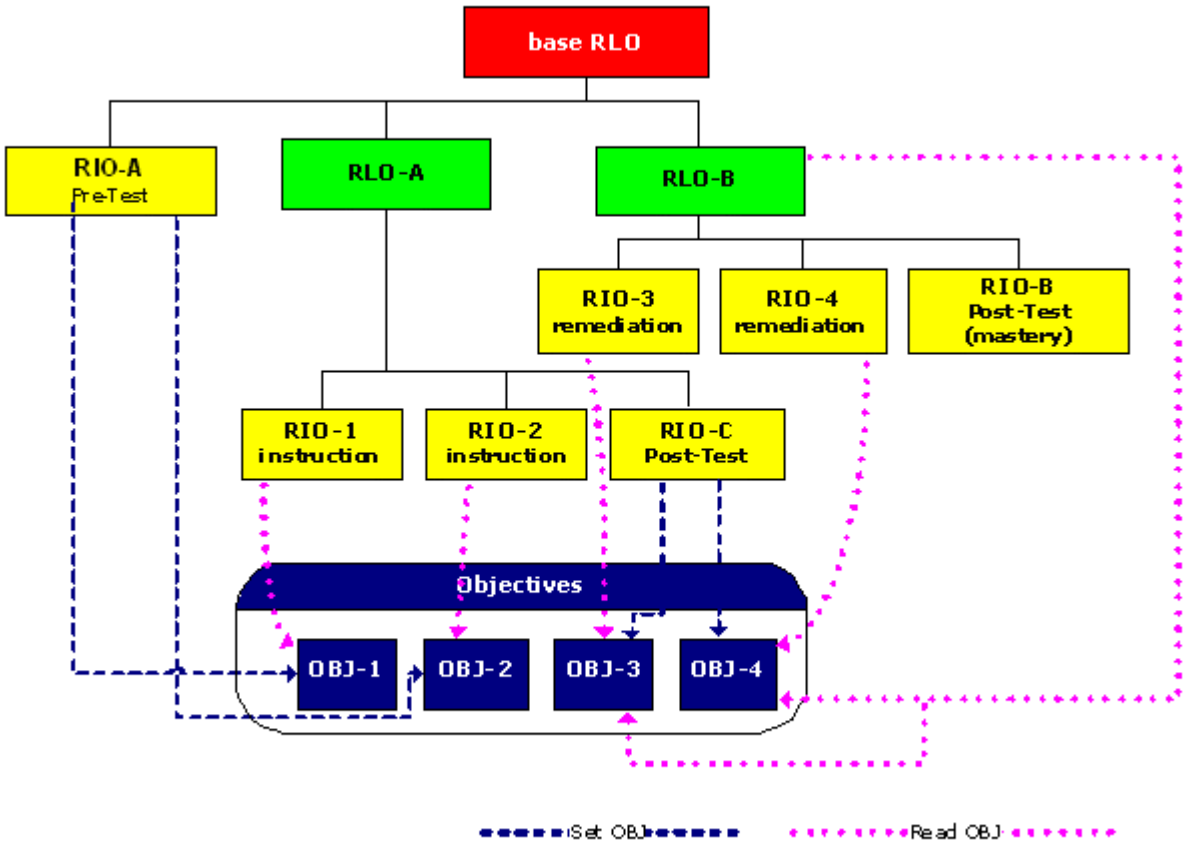

Repurposed with permission © Copyright 2003, Carnegie Mellon University

Example 10 Rules:	
Behavior	**SCORM™ Function**
1. To complete the base RLO, the learner must pass the post-test in RIO-C ***OR*** the post-test in RIO-B.	base RLO: Satisfied if one child satisfied RIO-A: isRolledup=false RLO-A: isRolledup=true RLO-B: isRolledup=true
2. The learner must complete the pre-test in RIO-A before attempting RLO-A. The learner cannot return to the Pre-Test from RLO-A.	base RLO: Choice=false; Flow=true; Forward Only=true
3. If the learner fails OBJ-1 in RIO-A, then present RIO-1.	RIO-A: set OBJ-1 RIO-1: skip if OBJ-1 satisfied
4. If the learner fails OBJ-2 in RIO-A, then present RIO-2.	RIO-A: set OBJ-2 RIO-2: skip if OBJ-2 satisfied
5. The learner can return to RIO-1 from RIO-2 at any time.	base RLO: Choice=true; Flow=true; Forward Only=false
6. To complete RLO-A, RIO-C must be passed.	RIO-1: isRolledup=false RIO-2: isRolledup=false RLO-A Rollup: If All Satisfied, satisfied.
7. The learner will skip RLO-B if RLO-A is passed.	RLO-B: skip if OBJ-1 satisfied and OBJ-2 satisfied
8. If the learner fails OBJ-3 in RIO-C, then present RIO-3.	RIO-C: set OBJ-3 RIO-3: skip if OBJ-3 satisfied
9. If the learner fails OBJ-4 in RIO-C, then present RIO-4.	RIO-C: set OBJ-4 RIO-4: skip if OBJ-4 satisfied
10. If the learner fails RIO-B, then the learner is halted in training and requires manual intervention.	*No unique SCORM™ function*

Building Instructional Models from the Examples

Any example or combination of examples can be "overlaid" on or combined with other examples, creating increasingly complex instructional strategies for courses or lessons. The models that follow show unique combinations of the examples presented in the previous section. The models show the reusability of the examples by labeling each as an instance of a example. In addition, the rules for each model specify from which example, as well as which application of the example, they were obtained. Depending upon how you apply behaviors and rules to the structures, you can achieve a variety of outcomes. These examples and models will provide you with viable sequencing options you can adapt to meet your particular training and educational requirements. For very complex instructional strategies, you can also apply any model or combination of models to another model as was done with the examples.

Model 1: Remediating Multiple RLOs

Model 1 represents two instances of Example 5 and once instance of Example 4. Example 4 contains two RIOs in an base RLO. For Model 1, the two RIOs are replaced by RLO-A and RLO-B that now represent the base RLO from Example 5. Each RLO contains three RIOs, one of which is a post-test. The inter-RIO remediation for each RLO is tracked by the LMS using objectives (OBJs) as global variables.

Each post-test item is linked to an OBJ. Based upon the learner's response to the test item, the OBJ is either set to *passed* or *failed*. In this example, suppose the learner fails a test item in RIO-3. OBJ-1 would be set to *failed* and the LMS would show the learner RIO-1, the RIO that corresponds to OBJ-1. If the learner passes both test items in RIO-3, then the objectives would be set to *passed*, and the learner would proceed to RLO-B.

MODEL 1: Remediating Multiple RLOs

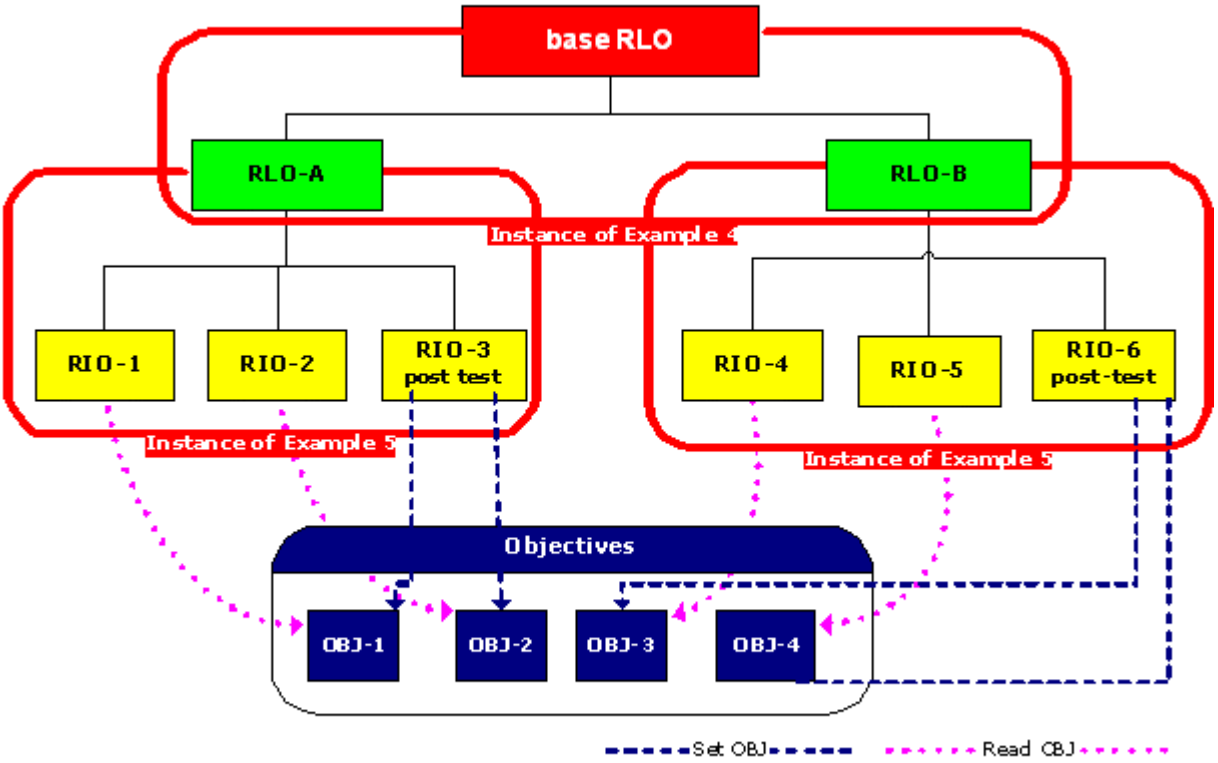

Repurposed with permission © Copyright 2003, Carnegie Mellon University

This guide shows two possible applications for Model 1, since each example used to create the model had two possible applications. However, the applications could be combined in any fashion resulting in several more applications for this one model. Suppose you want to create a "course" (the base RLO) with two units (RLO-A and RLO-B) each containing two lessons and a post-test (the RIOs). You want the learner to be remediated on a lesson-by-lesson basis, so you create test items tied to their corresponding instruction by objectives. If the learner fails one of the modules, the learner will not be able to complete the course without manual intervention. The rules for Model 1, *Application A* apply.

Model 1 Rules *(Application A)*:		
Behavior	**SCORM™ Function**	**FROM Example**

Model 1 Rules *(Application A)*:		
1. To complete the base RLO, the learner must complete RLO-A and RLO-B.	base RLO Rollup: If All Satisfied, satisfied	4 (A)
2. The learner cannot start RLO-B until RLO-A is complete.	RLO-A: Choice-false; Flow=true	4 (A)
3. To complete RLO-A, the learner must pass the post-test in RIO-3.	RLO-A Rollup: If All Satisfied, satisfied RIO-1: isRolledUp=false RIO-2: isRolledUp=false RIO-3: isRolledUp=true	5 (A)
4. The learner must complete RIO-1 before attempting RIO-2. The learner must complete RIO-2 before attempting RIO-3.	RLO-A: Choice=false; Flow=true	5 (A)
5. To complete RIO-3, both objectives must be passed.	*No unique SCORM™ function*	5 (A)
6. If the learner fails OBJ-1 in RIO-3, then present RIO-1.	RIO-3: set OBJ-1 RIO-1: skip if OBJ-1 satisfied	5 (A)
7. If the learner fails OBJ-2 in RIO-3, then present RIO-2.	RIO-3: set OBJ-2 RIO-2: skip if OBJ-2 satisfied	5 (A)
8. Allow two attempts for RIO-1, RIO-2, and RIO-3.	RIO-1, RIO-2, RIO-3: Attempt Limit=2	5 A)
9. If the learner fails RIO-3 on attempt 2, the learner is halted in training and requires manual intervention.	*No unique SCORM™ function*	5 (A)
10. To complete RLO-B, the learner must pass the post-test in RIO-6.	RLO-B Rollup: If All Satisfied, satisfied RIO-4: isRolledUp=false RIO-5: isRolledUp=false RIO-6: isRolledUp=true	5 (A)
11. The learner must complete RIO-4 before attempting RIO-5. The learner must complete RIO-5 before attempting RIO-6.	RLO-B: Choice=false; Flow=true	5 (A)
12. To complete RIO-6, both objectives must be passed.	*No unique SCORM™ function*	5 (A)
13. If the learner fails OBJ-3 in RIO-6, then present RIO-4.	RIO-6: set OBJ-3 RIO-4: skip if OBJ-3; Flow=true	5 (A)
14. If the learner fails OBJ-4 in RIO-6, then present RIO-5.	RIO-6: set OBJ-4 RIO-5: skip if OBJ-4; Flow=true	5 (A)
15. Allow two attempts for RIO-4, RIO-5, and RIO-6.	RIO-4, RIO-5, RIO-6: Attempt Limit=2	5 (A)
16. If the learner fails RIO-6 on attempt 2, the learner is halted in training and requires manual intervention.	*No unique SCORM™ function*	5 (A)

Now, suppose you want to use discovery learning to teach the learner how to start a gas turbine engine. You want to slightly restrict the learner's control because the content includes two types of learning. Assume RLO-A presents knowledge-based information about the gas turbine engine and tests the learner's knowledge of the components. Assume RLO-B shows two different procedures for starting the gas turbine engine (RIO-4 and RIO-5). The learner can select the RLOs in any order, since they can start the gas turbine engine before completing the basic instruction, but the learner has to see both RLOs in order to complete the course.

In RLO-A, the learner can select the presentation order of the RIOs or take the post-test in RLO-A at any time because the order in which the materials are presented is not

crucial to understanding the instruction. Since RLO-B teaches a procedure, the learner must see the procedures in a predefined order, so RIO-4 is presented before RIO-5 and RIO-5 before RIO-6 (the post-test simulation). The rules for Model 1, *Application B* apply to this example.

Model 1 Rules *(Application B)*:		
Behavior	**SCORM™ Function**	**FROM Example**
1. To complete the base RLO, the learner must complete RLO-A and RLO-B.	base RLO Rollup: If All Satisfied, satisfied	4 (B)
2. To complete each RLO, the learner must complete the post-tests within the RLOs. (See rules 4 and 9).	*No unique SCORM™ function*	4 (B)
3. The learner can view the RLOs in any order.	base RLO: Choice=true; Flow=true	4 (B)
4. To complete RLO-A, the learner must pass the post-test in RIO-3.	RLO-A Rollup: If All Satisfied, satisfied RIO-1: isRolledup=false RIO-2: isRolledup=false RIO-3: isRolledup=true	5 (B)
5. The learner can complete the RIOs in any order.	RLO-A: Choice=true; Flow=true	5 (B)
6. If the learner fails OBJ-1 in RIO-3, then present RIO-1.	RIO-3: set OBJ-1 RIO-1: skip if OBJ-1 satisfied	5 (B)
7. If the learner fails OBJ-2 in RIO-3, then present RIO-2.	RIO-3: set OBJ-2 RIO-2: skip if OBJ-2 satisfied	5 (B)
8. Allow as many attempts as needed to complete RIO-3.	*No unique SCORM™ function*	5 (B)
9. To complete RLO-B, the learner must pass the post-test in RIO-6.	RLO-B Rollup: If All Satisfied, satisfied RIO-4: isRolledup=false RIO-5: isRolledup=false RIO-6: isRolledup=true	5 (A)
10. The learner must complete RIO-4 before attempting RIO-5. The learner must complete RIO-5 before attempting RIO-6.	base RLO: Choice=false; Flow=true	5 (A)
11. To complete RIO-6, both objectives must be passed.	*No unique SCORM™ function*	5 (A)
12. If the learner fails OBJ-3 in RIO-6, then present RIO-4.	RIO-6: set OBJ-3 RIO-4: skip if OBJ-3 satisfied	5 (A)
13. If the learner fails OBJ-4 in RIO-6, then present RIO-5.	RIO-6: set OBJ-4 RIO-5: skip if OBJ-4 satisfied	5 (A)
14. Allow two attempts for RIO-4, RIO-5, and RIO-6.	RIO-4, RIO-5, RIO-6: Attempt Limit=2	5 (A)
15. If the learner fails RIO-6 on attempt 2, the learner is halted in training and requires manual intervention.	*No unique SCORM™ function*	5 (A)

Model 2: Mastery Testing Multiple RLOs

Model 2 demonstrates how Examples 4 and 5 can be combined into multiple assessed RLOs with a mastery test (RIO-F) for the entire base RLO. The links to objectives for remediation within RLOs 1, 2, and 3 are not shown in this model, but they are identical to those shown in Example 5.

MODEL 2: Mastery Testing Multiple RLOs

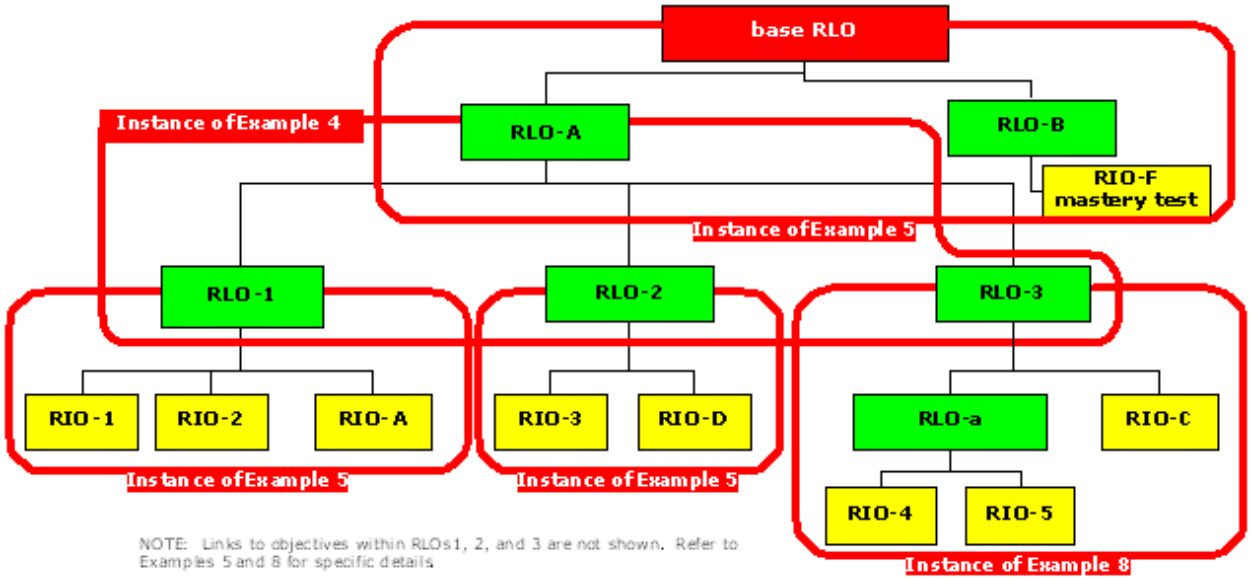

Repurposed with permission: © Copyright 2003, Carnegie Mellon University

Suppose you wanted to create a course (the base RLO) with several critical lessons (RLOs 1 – 3). Each lesson builds upon the instruction of the previous lesson, so the lessons must be completed in order. Each of the lessons has several objectives (the RIOs) that are tested and remediated independently. You decide to allow the learner two attempts in each lesson to pass the post-test by providing remediation between the attempts. If the learner successfully passes each of the lessons (thereby completing RLO-A), then you allow the learner to attempt the mastery test (RIO-F) in RLO-B. If the learner passes the mastery test, then you consider the course complete. However, since each of the lessons are critical, if the learner cannot pass one of the lessons (RLOs 1 – 3) after two attempts, you decide they should be automatically halted in training and require manual intervention to proceed. The rules for Model 2 would apply.

Model 2 Rules:		
Behavior	**SCORM™ Function**	**FROM Example**
1. To complete the base RLO, the learner must pass the mastery test (RIO-F) in RLO-B.	base RLO Rollup: If All Satisfied, satisfied RLO-A: isRolledup=false RLO-B: isRolledup=true	5 (A)
2. The learner must complete RLO-A before attempting RLO-B.	base RLO: Choice=false; Flow=true	5 (A)
3. To complete RLO-A, the learner must complete RLO-1, RLO-2, and RLO-3 in order.	RLO A: Choice=false; Flow=true	4 (A)
4. To complete RLO-1, the learner must pass the post-test in RIO-A.	RLO-1 Rollup: If All Satisfied, satisfied RIO-1: isRolledup=false RIO-2: isRolledup=false	5 (A)

Model 2 Rules:		
	RIO-A: isRolledup=true	
5. The learner must complete RIO-1 before attempting RIO-2. The learner must complete RIO-2 before attempting RIO-A.	RLO-1: Choice=false; Flow=true	5 (A)
6. The learner can return to RIO-1 from RIO-2 at any time.	RLO-1: Forward Only=false	5 (A)
7. The learner cannot return to RIO-1 or RIO-2 once RLO-a is attempted.	RLO-1: Forward Only=true	5 (A)
8. If the learner fails OBJ-1 in RIO-A, then present RIO-1.	RIO-A: set OBJ-1 RIO-1: skip if OBJ-1 satisfied	5 (A)
9. If the learner fails OBJ-2 in RIO-A, then present RIO-2.	RIO-A: set OBJ-2 RIO-2: skip if OBJ-2 satisfied	5 (A)
10. Allow two attempts for RIO-1, RIO-2, and RIO-A.	RIO-1, RIO-2, RIO-A: Attempt Limit=2	5 (A)
11. If the learner fails RIO-A on attempt 2, the learner is halted in training and requires manual intervention.	*No unique SCORM™ function*	5 (A)
12. To complete RLO-2, the learner must pass the post-test in RIO-D.	RLO-2 Rollup: If All Satisfied, satisfied RIO-3: isRolledup=false RIO-D: isRolledup=true	5 (A)
13. The learner must complete RIO-3 before attempting RIO-D.	RLO-2: Choice=false; Flow=true	5 (A)
14. The learner cannot return to RIO-3 once RIO-D is attempted.	RLO-2: Forward Only=true	5 (A)
15. If the learner fails OBJ-3 in RIO-D, then present RIO-3.	RIO-D: set OBJ-3 RIO-3: skip if OBJ-3 satisfied	5 (A)
16. Allow two attempts for RIO-3 and RIO-D.	RIO-3, RIO-D: Attempt Limit=2	5 (A)
17. If the learner fails RIO-D on attempt 2, the learner is halted in training and requires manual intervention.	*No unique SCORM™ function*	5 (A)
18. To complete RLO-3, the learner must pass the post-test in RIO-C.	RLO-3 Rollup: If All Satisfied, satisfied RLO-a: isRolledup=false RIO-C: isRolledup=true	8
19. The learner must complete RLO-a before attempting RIO-C.	RLO-3: Choice=false; Flow=true	8
20. The learner can return to RIO-4 from RIO-5 at any time.	RLO-a: Forward Only=false	8
21. If the learner fails OBJ-4 in RIO-C, then present RIO-4.	RIO-C: set OBJ-4 RIO-4: skip if OBJ-4 satisfied	8
22. If the learner fails OBJ-5 in RIO-C, then present RIO-5.	RIO-C: set OBJ-5 RIO-5: skip if OBJ-5 satisfied	8
23. Allow two attempts for RIO-4, RIO-5, and RIO-C.	RIO-4, RIO-5, RIO-C: Attempt Limit=2	8
24. If the learner fails RIO-C on attempt 2, the learner is halted in training and requires manual intervention.	*No unique SCORM™ function*	8

Model 3: Pre- and Post-Test Sequencing with RLOs

Model 3 is a combination of Examples 5 and 6. In this model, a single RIO from Example 6 was replaced with the base RLO from Example 5. That base RLO is now RLO-B.

MODEL 3: Pre- and Post-Test Sequencing with RLOs

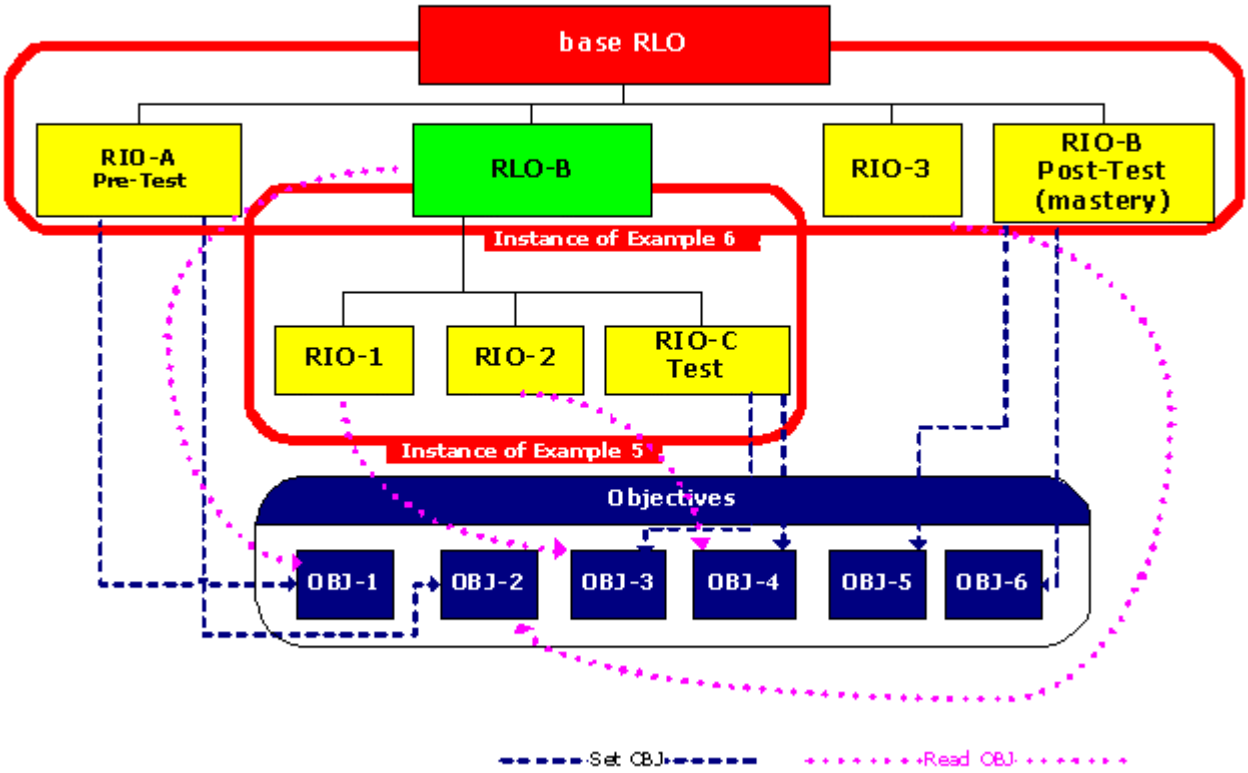

Repurposed with permission: © Copyright 2003, Carnegie Mellon University

Suppose you need to create a course (the base RLO) that assigns competencies (knowledge, skills, or abilities) to the learner upon successful completion of the instruction. To successfully complete the course, the learner is required to pass a mastery test (RIO-B). You decide that, rather than forcing all learners to complete the instructional material, you will allow them to take a pre-test (RIO-A). The pre-test will enable learners who already possess the competencies to bypass the instruction and proceed directly to the mastery test (RIO-B). One of the lessons (RLO-B) in the course is a critical lesson that teaches an ordered process, so learners who take the lesson are required to complete a post-test (RIO-C) that is a simulation of the process they learned so they can receive credit for passing the competency. For the other lesson (RIO-3), the learner must only view the lesson to receive a competency in that subject area. The rules for Model 3 would apply.

Model 3 Rules:		
Behavior	**SCORM™ Function**	**FROM Example**
1. To complete the base RLO, the learner must pass the post-test in RIO-B.	base RLO Rollup: If All Satisfied, satisfied RIO-A: isRolledup=false RLO-B: isRolledup=false RIO-3: isRolledup=false RIO-B: isRolledup=true	6
2. The learner must complete the pre-test in RIO-A before attempting RLO-B or RIO-3.	base RLO: Choice=false; Flow=true	6
3. The learner can return to RIO-A from RLO-B or RIO-3 at any time.	base RLO: Forward Only=false	6
4. If the learner fails OBJ-1 in RIO-A, then present RLO-B.	RIO-A: set OBJ-1 RLO-B: skip if OBJ-1 satisfied	6
5. If the learner fails OBJ-2 in RIO-A, then present RIO-3.	RIO-A: set OBJ-2 RIO-3: skip if OBJ-2 satisfied	6
6. To complete RLO-B, the learner must pass the post-test in RIO-C.	RLO-B Rollup: If All Satisfied, satisfied RIO-1: isRolledup=false RIO-2: isRolledup=false RIO-C: isRolledup=true	5 (A)
7. The learner must complete RIO-1 before attempting RIO-2. The learner must complete RIO-2 before attempting RIO-3.	RLO-B: Choice=false; Flow=true	5 (A)
8. To complete RIO-C, both objectives must be passed.	*No unique SCORM™ function*	5 (A)
9. If the learner fails OBJ-3 in RIO-C, then present RIO-1.	RIO-C: set OBJ-3 RIO-1: skip if OBJ-3 satisfied	5 (A)
10. If the learner fails OBJ-4 in RIO-C, then present RIO-2.	RIO-C: set OBJ-4 RIO-2: skip if OBJ-4 passed	5 (A)
11. Allow two attempts for RIO-1, RIO-2, and RIO-C.	RIO-1, RIO-2, RIO-C: Attempt Limit=2	5 (A)
12. If the learner fails RIO-C on attempt 2, the learner is halted in training and requires manual intervention.	*No unique SCORM™ function*	5 (A)
13. If the learner fails RIO-B, then the learner is halted in training and requires manual intervention.	*No unique SCORM™ function*	6

Model 4: Traditional CBT Branching with Multiple Decisions

Suppose that your “course” (the base RLO) teaches Apprentice Trainer skills. You want the learner to have an adaptive scenario-based learning experience. You decide to create a scenario in which the situation changes based on the learner’s decision. In this model, RIO-1 presents the learner with a customer situation. After reading or viewing the scenario in RIO-1, the learner decides how to handle the customer.

NOTE: The colors of the RLOs in Model 4 were changed to show the recurrent structure of the rules assigned to each RLO for three way branching. Each RLO color represents a unique set of rules that would be programmed for the RLO.

The learner chooses Choice C (in RIO-1) and then is directed to RLO-1. RLOs can contain rules, but not content, so the rules of RLO-1 direct the learner to RIO-2. RIO-2 presents more information about the customer situation. The learner must decide what action to take. If the learner chooses B in RIO-2, then the learner would go to RLO-5.

The rules on RLO-5 send the learner to the next situation with this customer (RIO-3). Assuming the learner selects choice A from RIO-3, the learner would go to RLO-9.

In example 4, RLO-9 could be the final scenario you designed, or you could continue building upon the situation with this particular customer through several more decision levels. RLOs 2 and 3 show other possible routes a learner could take through this instructional material depending upon the decision he made in RIO-1. The objectives in this model are used as global variables. They track the learner's decisions and progress throughout the base RLO. The rules for Model 4 are specified within the diagram.

Model 4: Traditional CBT Branching with Multiple Decisions

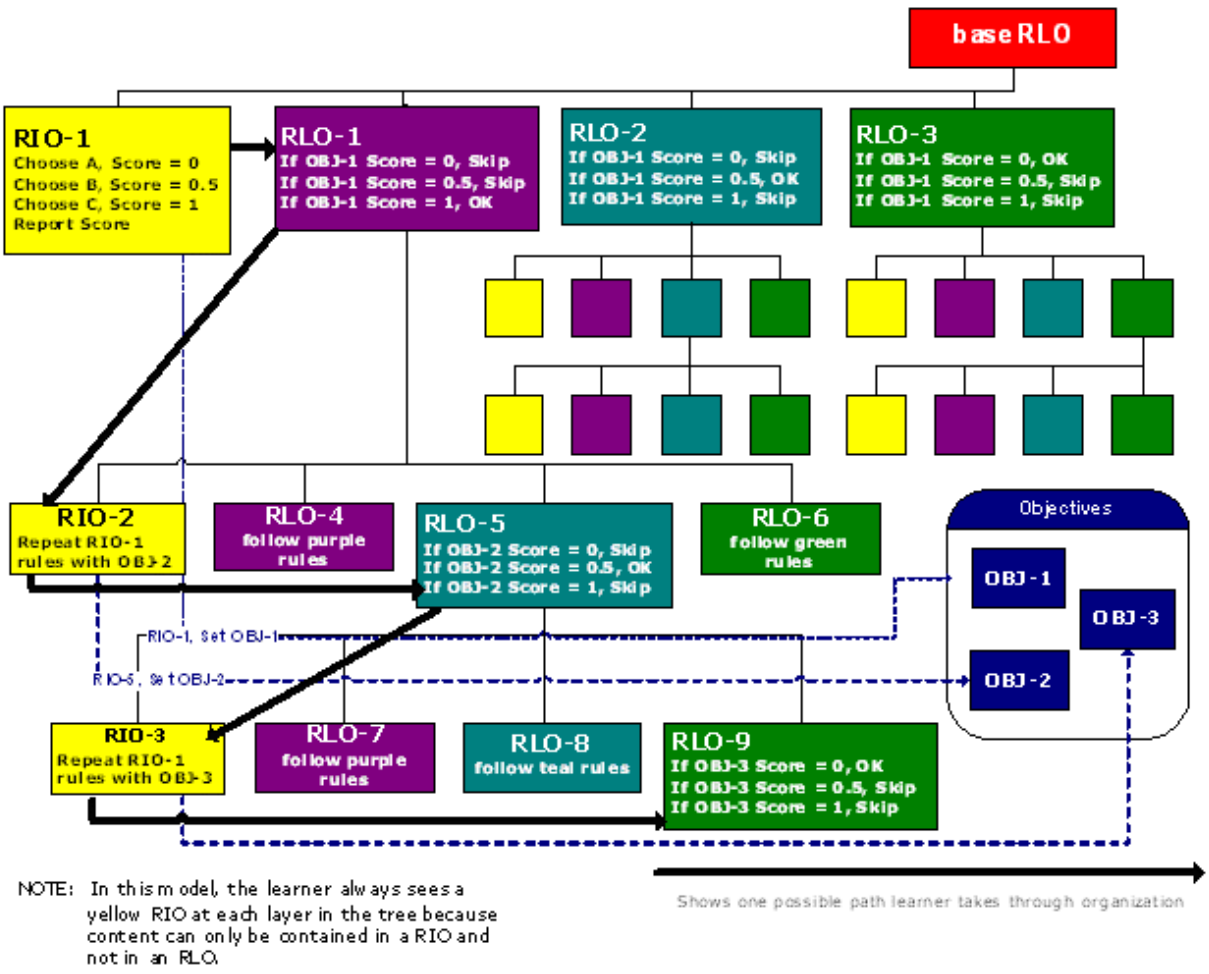

Repurposed with permission © Copyright 2003, Carnegie Mellon University

Model 5: Customized Learning Using Three-Way Branching

This model shows how the initial level of Model 4 (or Example 9) can be used to customize learning experiences by presenting learners with a series of choices about who they are, what they do, or what they know. The choices for this type of customization would be predefined learner roles, positions, or competencies.

Using the Apprentice Trainer example presented in Model 4, the learner could select *Becoming a Qualified Workplace Trainer*, *Effective Communication*, or *The Learning Experience*. Based on the role the learner selects in RIO-1, RLO-1, RLO-2, and RLO-3 would represent different content structures for the three different lessons. Model 5 could remain 3-way branching examples (as show in Model 4) or it could become RLOs of the other examples presented in this guide, thereby giving each role a unique instructional strategy. For Model 5, we've shown the latter using other examples presented in this guide.

Let's assume RLO-1, shown in purple, contains the content for a *Becoming a Qualified Workplace* Trainer. RLO-1 is an instance of Example 7. It has a pre-test, content, and a post-test, since Apprentice Trainers may be required to see all activities in a strictly prescribed sequence and must show mastery of the content. RLO-2 is an instance of Example 4 that was designed specifically for *Effective Communication*. A Trainee might be able to choose the activities she wants to see, since she already has advanced product knowledge. RLO-3 was designed for *The Learning Experience*. It reuses the Example 9 for 3-way branching (like in Model 4) to question Trainees about their knowledge and to target areas where they need improvement.

Model 5: Customized Learning Using 3-Way Branching

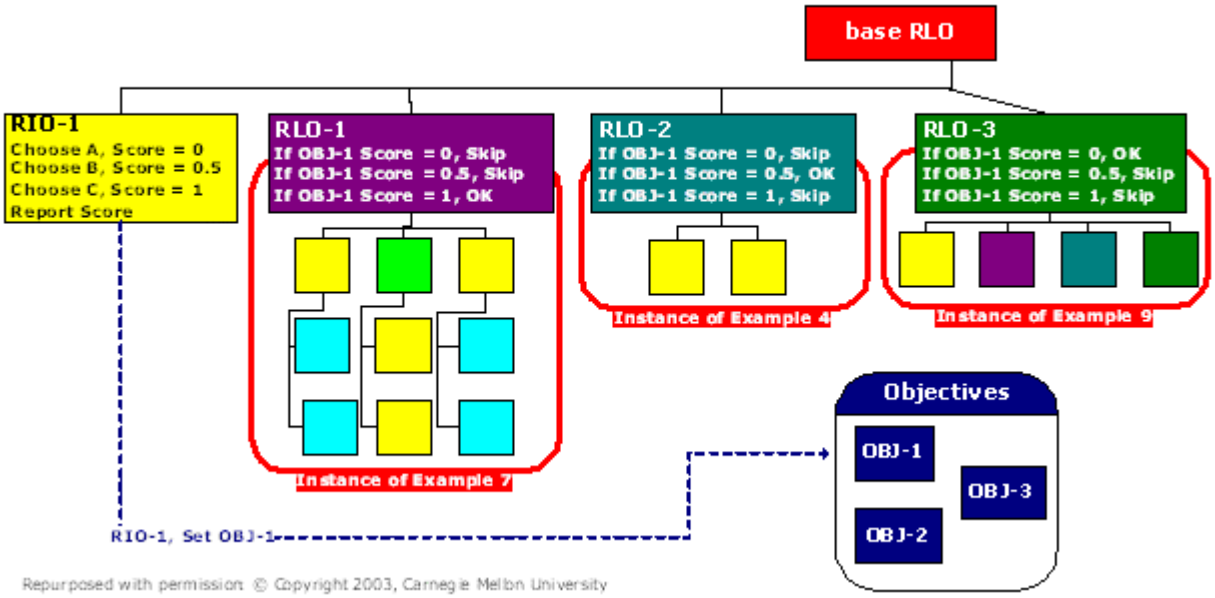

Repurposed with permission © Copyright 2003, Carnegie Mellon University

Model 5 can be recreated for customized learning using any of the example or models in this guide. You can also create your own unique content structure. Simply replace the example's base RLO with one of the RLOs shown here.

This page intentionally left blank.

APPENDIX I: SAMPLE STATEMENT OF WORK

STATEMENT OF WORK
FOR
ADVANCED DISTRIBUTED LEARNING (ADL)

Date

INTRODUCTION

Purpose. This Statement of Work (SOW) provides the minimum performance specifications, information and guidance for the design, development, implementation and evaluation of the _____ Advanced Distributed Learning (ADL) Training System. Additionally, this SOW outlines the minimum requirements to develop new and modify existing _____ content for the following curriculum areas.

- Enlisted Aircrew (EAC) Training, track
- Maintenance "C" Initial training at the Maintenance Training Unit (MTU)
- Pilot Training and Readiness Level 100 (Systems and Procedures) at the Aircrew Training System (ATS)

The ____ ADL program is UNCLASSIFIED and will be distributed on demand from the Aircrew Training System (ATS) facilities, Maintenance Training Unit (MTU) facilities and remote locations.

Overview. the _____ content was initially developed by the Original Equipment Manufacturer (OEM). The OEM content was accepted by the government on DATE. Underestimation of the initial scope to complete that effort left the existing content deficient in several areas. These areas include (a) technically inaccurate lesson content, (b) Style Guide deviations, (c) inappropriate implementation strategy for Level of Learning/Interactivity, and (d) lessons never delivered. The content is both Computer Assisted Instruction (CAI) and Interactive Courseware (ICW). Both the CAI and the ICW were entirely built using Level I Interactivity. Table 1 gives the specific listing of content **delivered** by the OEM.

Content Type	Number of Lessons	Hours of Instruction
Maintenance CAI	166	475.5
EAC CAI	36	70
Pilot CAI	1	2
Maintenance ICW	60	51.5
EAC ICW	1	12
Pilot ICW	59	86.27

Table 12 ~~1~~ **Delivered Lessons**

The existing maintenance curriculum will be used to train Maintenance trainees beginning in DATE. It is anticipated that Pilot and EAC curriculum Ready For Training (RFT) will be DATE.

The ADL content lays the foundation for a training continuum that includes part task trainers, simulators and the weapons system. This integrated training system will ensure that the basic aspects of maintenance/operations are taught and that the essential skill sets are developed. Failure to build the proper foundation will result in wasted time and resources. The Figure provided below depicts the training continuum.

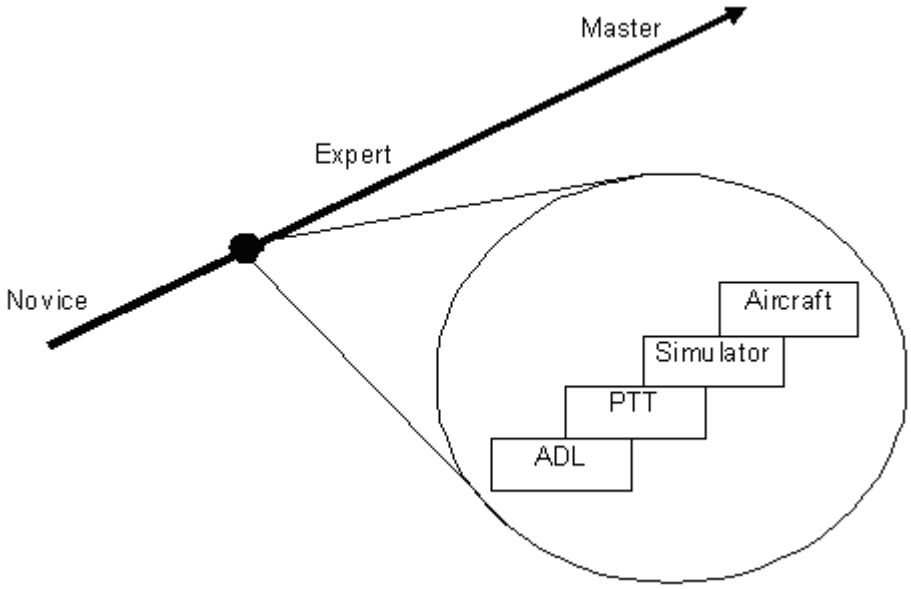

Figure 19 ~~4~~ **Training Continuum**

Scope. Commander Naval Air Systems Command (NAVAIRSYSCOM) is the sponsor for the total effort.

General. All content shall be produced using off-the-shelf software and be capable of playing on IT-21 hardware to include the existing _____ schoolhouse hardware and the Aviation Maintenance Training Continuum System (AMTCS) hardware. The Contractor developed web-based content shall produce and display dynamic visuals to provide Pilot, EAC and Maintenance training. The content shall:

(1) Provide two and three-dimensional displays/schematics (under computer control);
(2) Respond to various user inputs;
(3) Generate scenarios/simulations where required by the government mandated Instructional Strategy; and
(4) Support all of the ____ Learning Objectives.

_____ content shall provide EAC, maintenance personnel and pilots with an opportunity to learn the required facts, rules, concepts, and procedures required as well as provide an opportunity to practice analysis, problem-solving and decision-making.

Content Requirements. The requirements for EAC, maintenance, and pilot content vary; depending on the existing content's current state and the date that content is needed for training. The following paragraphs give a general overview of the scope required to successfully complete this effort. Specific details are contained in Attachments A, B, and C.

Enlisted Aircrew (EAC). The contractor shall be required to develop new lessons as well as make modifications to the existing CAI lessons. This will include upgrading from NATOPS Change 3 to NATOPS Change 4, Revision 1. Perform an ECP modification to the existing content to reflect all changes associated with the Block "A" Upgrade. Additionally, insert audio capability to the External Load System Lesson and Emergency Procedures Lesson. Develop two new CAI lessons on Safety/Operational Risk Management (S/ORM) and Startup and Shutdown Procedures. Develop Level IV Interactivity ICW lessons for Daily and Turnaround Inspections, 35 Hour Inspections, and 210-Hour Inspections. The development for the three new ICW lessons shall be developed using the government provided Curriculum Outline. Each lesson modified or developed new will be in accordance with the government approved ____ Style Guide. The contractor shall also procure and install audio speakers in five classrooms. All content shall be developed in the latest version of the Shareable Content Reference Model (SCORM™) specification.

The contractor shall also modify existing enlisted aircrew content, produced and delivered under Contract Number _____. This task shall require the contractor to perform a major modification of the content. A major modification is defined as a change in scope, complexity and sequence/flow of the lesson. The contractor shall be provided Discrepancy Reports (DRs) to determine the level of effort for each lesson. DRs are currently not available but will be provided within four months after contract award. The EAC schoolhouse opens in July 2003.

Maintenance. The contractor shall develop 68, Level IV, self paced troubleshooting lessons. Each lesson will be in accordance with a government provided Curriculum Outline, government approved _____ Style Guide, and includes a range of zero (no fault), one faulted path (F1)

and/or two faulted paths (F2). (Note: A zero faulted path is an operational check of the equipment. A faulted path includes verifying the existence of, troubleshooting, and fixing a discrepancy.) Additionally, the contractor shall develop eight aided and unaided performance tests that will be used by the students as self-checks. Each performance test will be simulation based and include five faulted paths. All content shall be developed to the latest version of the SCORM™ specification and shall include the Block "A" Modification.

The contractor shall also modify existing maintenance content, produced and delivered under Contract Number _____. This task shall require the contractor to perform a major modification of the content. A major modification is defined as a change in scope, complexity and sequence/flow of the lesson. The contractor shall be provided Discrepancy Reports (DRs) to determine the level of effort for each lesson. DRs are currently not available but will be provided within four months after contract award.

Pilot. Develop all pilot systems and procedures content in accordance with a government provided Curriculum Outline (Training Course Control Document). The existing graphics may be used to reduce resource requirements. This task essentially requires the contractor to develop all new content. . All content shall be developed to the latest version of the SCORM™ specification.

Approval Authority. Overall coordination, final approval and authority for this project is the responsibility of the NAVAIRSYSCOM ____ APM(TS). Final acceptability or unacceptability of all deliverables and tasks performed by the contractor is the responsibility of the ____ APM(TS). A Contracting Officer's Representative (COR) will be assigned to manage the overall effort for the APM(TS) and the Contracting Officer. The COR will be assisted by one on-site Technical Point of Contact (TPOC). The ____ APM(TS) shall make performance, cost and schedule decisions based on technical input from the Contracting Officer's Representative (COR).

The TPOC shall coordinate the government review process and provide one set of Discrepancy Reports for each training product. The DRs shall be sent to the COR for approval/rejection in the time required by the CDRL. *DRs will be written in specific terms identifying the problem and stating the corrective action to be taken by the contractor.* Late delivery of DR notices to the contractor **does not** signify automatic acceptance. Deliverables are not considered accepted or rejected until the Contractor receives written notification from the _____ APM(TS).

APPLICABLE DOCUMENTS

General. The documents listed below are not necessarily all of the documents referenced herein, but are the ones that are needed in order to fully perform the tasks required in the Statement of Work (SOW).

Specifications, standards and handbooks.

Navy ILE Content Design Handbook: Business Rules and Specifications

MIL-PRF-29612B Performance Specification, Training Data Products

MIL-HDBK-29612-1 Department of Defense Handbook, Guidance for Acquisition of Training Data Products and Services
MIL-HDBK-29612-2 Department of Defense Handbook for Instructional Systems Development Process

MIL-HDBK-29612-4 Department of Defense Handbook, Glossary of Training Terms

MIL-HDBK-29612-5 Department of Defense Handbook, ADL

MIL-HDBK-9660 Department of Defense Handbook, DoD-Produced CD-ROM Products

Aircraft Industry Computer Based Training Committee (AICC) Standards for Web Based Training (AGR 010)

Information Technology for the 21st Century (IT-21)

Advanced Distributed Learning Initiative (ADLI)

Shareable Content Object Reference Model (SCORM™)

Guidance Documents

____ ____ Style Guide

DODI 3222.2 Development and Management of ICW for Military Training

OPNAVINST 1500.73 Development, Acquisition and Management of ICW for Navy Training

JIEO REPORT 8300 Department of Defense Minimum Desktop Personal Computer Configuration

NOTE: The most current Standard, Instruction, Guidance, Handbook and Style Guide shall apply.

Order of precedence. In the event of a conflict between the Statement of Work (SOW) and the references cited herein, the SOW takes precedence.

DEFINITIONS

SOW Terms and Definitions. Provided below are key terms and definitions reflected in this SOW. Refer to MIL-HDBK-29612 Parts 1 through 5 for additional definitions.

Computer-Aided Instruction (CAI). CAI exploits computer technology to provide for the storage and retrieval of information and involves use of computers to *assist the instructor* in the delivery of instruction.

Computer Managed Instruction (CMI). See also Learning Management System. Minimum functions of the CMI will include a management administration system designed to track student performance over time, provide information concerning performance trends, record individual and group performance data, schedule training, and provide support for other training management functions.

Course Structure Format (CSF). CSF is made up of the elements, blocks, Shareable Content Objects (SCOs) or Assignable Units (AUs), and objectives. The CSF is intended to promote reuse of entire courses and encourage the reuse of course components by exposing all the details of each course elements. The CSF is intended to reduce or eliminate dependency of a course on a particular LMS implementation. The purpose of the CSF is to provide a means for moving a course from one LMS to another.

Content Management System. CMS involves the use of computers to provide data storage and management of information collected during the analysis, design, development, production and evaluation of training. CMS provides an audit trail for the life of the program.

Electronic testing. Electronic testing is a general term used to encompass all methods for applying computers in the assessment of human attributes, knowledge, and skills. Most forms of computer based testing tailor or adapt the sequence, content, or difficulty of test items to the responses of the person being tested, the behavior dictated by the Learning Objective

and/or the instructional strategies used in the presentation of lesson content.

Interactive Courseware (ICW). ICW is computer controlled content that relies on trainee input to determine the pace, sequence, and content of training delivery using more than one type medium to convey the content of instruction. Interactive content can link a combination of media, to include but not be limited to; programmed instruction, video, text, graphics, audio, animation, and simulation to enhance the learning process.

Learning Management System (LMS). A LMS is a software program developed to manage student/teacher administration functions. A LMS is a sophisticated program that assists administrators in performing the functions of tracking of student registration, scheduling, gathering, and processing student performance data. It may control the entire instructional system, including the traditional classroom. A LMS provides students an integrated view of their entire active content, assignments, and progression in a syllabus that spans multiple courses. The purpose of a LMS is to manage and deliver content. Core features include:

a. An open architecture.
b. SCOs that are modularly stored.
c. Content storage provided via an Enterprise-class Standard Query Language (SQL) database.
d. Records management individually and by group of tests.
e. Ability for students to view assignments in integrated syllabus across multiple courses.
f. Integration with other products.
g. Highly flexible content presentation.
h. Synchronous tools built-in, but can integrate to other delivery systems.
i. Support various content authoring and reporting tools.
j. Importable and exportable grading and reporting capabilities.

LMSs establish a common blueprint and set of data for managing instructional content and student performance data, thereby increasing opportunities to share instructional resources across isolated instructional systems. LMSs utilize web-server technology that allows administration

over the Web. LMSs also allow an instructor to manage a student in a virtual classroom setting.

Levels of Interactivity.

a. Level I - Basic Interactivity. This is the lowest level of development. Level I lessons are linear (one idea after another), and are used primarily for introducing an idea or concept. There is little "interaction" other than the student touching the screen or using a keystroke or mouse click to continue. Branching is not a feature other than in the use of a menu system. Testing is provided with immediate Feedback. Level I does employ the use of a CMI system. The media used are primarily text and graphics (not complex), but may also include audio and video.
b. Level II - Medium Interactivity. Level II involves all levels of learning from recall of information to performing skills. Level II allows the user to have increased control over lesson presentation; that is, there is more interaction. Multiple objects may appear on the screen and may move independently, or may be controlled by the user. Level II will combine audio, video, text, graphics, and animation. Level II uses branching (1 to 2 levels), testing, and immediate feedback. CMI features are used in Level II lessons to track and analyze student performance. Level II lessons includes designs for recall of facts, rules and concepts, but also support other instructional strategies at the low end, such as Tutorials, Drill/Practice, Collaborative Learning, Discovery Method,
c. Level III - High Interactivity. This level involves aspects of both Level I and Level II while using the full abilities of technology. Level III lessons supports high end or complex forms of training using instructional strategies such as Gaming , Simulation, and the Socratic method. Level III may present on-screen interaction similar to that used in an aircraft simulator. This level provides a high degree of interactivity, extensive branching capability (3 or more levels), maximum remediation opportunity (supports multiple levels of errors), real-time event simulation with minor equipment limitations, capability to interface with other output devices, and thorough CMI capability.
d. Level IV – Very High Interactivity using Simulation. This ICW category involves the greatest in-depth recall of a larger amount of information (compared to Categories 1, 2, and 3) and allows the user a high level of control over the lesson. Every possible subtask is analyzed and presented with full, on-screen interaction, similar to the approach used in aircraft simulator technology. The lesson

material is extremely complex and involves more frequent use of peripherals to affect the transfer of learning. This type of lesson most often uses combinations of scenarios, simulation, gaming and drill-practice as the chosen instructional strategy. This category normally supports certification or qualification requirements. Complicated operation and maintenance procedures are normally practiced with Category 4 and involves all of the elements of Categories 1, 2, and 3 presentations plus the following:

- High degree of interactivity.
- Extensive branching (four or more levels).
- Levels of sophistication - short of artificial intelligence.

Metadata. Metadata is the definition or description of data (i.e., data about data). Metadata describes how and when and by whom a particular set of data was collected, and how the data is formatted. Metadata is essential for understanding information stored in data warehouses.

Simulation. A simulation is the representation or simulation of the salient features, operation, or environment of a system or subsystem through the use of technology that permits students to acquire skills and learn tasks through interaction in the same manner as would occur in a reality situation.

Shareable Content Objects (SCO). SCOs are self-contained entities of instructional material such as images, shapes, and text comprised of chunks of shareable content that can be individually selected, manipulated, and reused for a different purpose. SCOs are the building blocks of instruction required to compile the training and education needed for a specific learner at a specific time. Using Commercial Off-the-Shelf (COTS), SCOs can be assembled to develop classroom instruction, ICW, and WBT courses that include text, web pages, video, and audio.

Sharable Content Object Reference Model (SCORM™). SCORM™ was developed by the ADL Technical Working Group (TWG) to detail specifications for ADLI supported products. SCORM™ defines a reference model for content "objects" that meet the ADL high-level requirements.

DELIVERABLES

Overview. The Contractor shall develop UNCLASSIFIED content in accordance with the Statement of Work, the Attachments and the DD1423s. This content shall be produced based on the government provided Curriculum Outlines for EAC, maintenance and pilot courses. The requirements listed below give an overview of the requirements for EAC, maintenance and pilot production. Requirements specific to each course are described in Attachments A, B, and C. A description of Option 3, for the Air Force, is found in Attachment D. The Contractor shall produce and deliver the following management, design, development, distribution system, and support products for EAC, maintenance, pilot and Air Force (if Option 3 is exercised) tasks.

Management Requirements.

Cost/Schedule Status Report (C/SSR). The contractor shall provide monthly C/SS Reports summarizing the contract cost and schedule performance information. The report shall contain contract and program identification, contract data, original and current contract values and the management estimate at completion, performance data which consists of cost and schedule performance information by summary level Work Breakdown Structure elements, and narrative explanations which presents information on significant cost and schedule variances and other problems of contract interest. The contractor shall provide the report in the Sample Format attached to the Data Item Description (DI-MGMT-81467). The C/SSR shall be delivered in paper form to the Program Manager and the COR.

Conference Agenda. The contractor shall prepare an agenda to include all areas to be addressed during the In-Progress Reviews (IPRs). A draft of each agenda shall be prepared and delivered to the Government for review and approval prior to submission of a final copy. Delivery shall be in accordance with the DD1423.

In-Progress Reviews (IPR). The Contractor shall participate in quarterly IPRs to discuss status of the project, discuss deliverables, and identify/solve problems. Each IPR may be from 1 to 3 days in length, depending on agenda items. Length will be determined by the issues to be covered. IPRs will **not** be used to review deliverables. All IPRs will be held at the ____ facilities and shall be coordinated by the APM(TS).

Contract Kick-off and Design Meeting. The Contractor shall participate in a Contract Kickoff and Design meeting, within 7 working days after contract award. The Contract Kick-off Meeting will be one day in length. The Contractor shall orally present their proposed approach, their Integrated Management Plan (IMP) and Integrated Master Schedule

(IMS). The contractor shall be prepared to discuss their proposed approach with the entire government team.

The Design Meeting, following the Kick-off meeting, will be a working group to definitize technical requirements, establish acceptable content design strategies, discuss module/lesson content, and further establish the plan for management, development, production and implementation of the web-based content. This meeting will be used to communicate the roles and responsibilities of team members, present the planned approach to all members, and fine-tune the design approach. This information will be communicated in the Contractor's Final submittal of the Management Plan, Schedule and ILE Style Guide as defined below:

Integrated Master Plan (IMP). The Contractor shall produce, deliver and maintain an Integrated Master Plan. The contractor shall produce as part of their proposal the IMP. The IMP shall describe, in detail, how work will be accomplished, demonstrate how their proposed approach is structured to minimize and control risk, to accomplish up-front summary planning and commitment, to provide a basis for subsequent detailed planning, to instill a balanced design principle, to measure process of life-cycle requirements, and to provide management with in-process verification of requirements in order to make informed milestone decisions. The contractor shall produce an event-based plan that measures program maturity by capturing the initiation/conclusion of the tasks, key events, significant accomplishments, and accomplishment criteria as well as the processes necessary to implement the program. The following definitions apply:

Task. A task describes the work to be performed by the contractor that singularly, or in combination with other tasks, satisfies the SOW and WBS. The task section contains summary level tasks that read like a SOW and replaces the effort descriptions usually contain in a SOW.

Event. An IMP event is a key contractual or programmatic event chosen by either the government or the contractor to define progress on a program or project at a specific point in time. IMP events mark the initiation or conclusion of intervals of major program activity and represent a decision point related to system development maturity. IMP events should be properly sequenced and may include demonstration milestones, technical or program reviews audit, and other key decision points. Events should be identified as entry or exit events. [e.g. Initiate Preliminary Design

Review (PDR) or Complete (PDR) and should be accomplished by one or more significant accomplishments that must be completed prior to entering or exiting the event].

Significant Accomplishment. A significant accomplishment is a specified result substantiating an event, indicating the level of progress or maturity directly related to each product/process. An accomplishment should be measurable. Significant accomplishments are interim or final critical effort that must be completed prior to entering a follow-on event or exiting the current event.

Significant accomplishments are organized first by the WBS element/product and then by functional area. Significant accomplishments include: a) a desired result at a specified event which indicates a level of design maturity, (or progress, directly related to each product and process), b) a discrete step in a process, and c) a description of the interrelationship and/or integration of functional disciplines (e.g. maintainability, manufacturing, and reliability). Significant accomplishments shall provide sufficient insight into the process for achieving objectives identified in the SOW. The significant accomplishments shall be sequenced in a manner that ensures a logical path is maintained throughout the effort and tracks against the key events.

Accomplishment Criteria. Accomplishment criteria are definitive measures or useful indicators substantiating the maturity level of an associated accomplishment. It is the completion of specified work that ensures closure of a specified significant accomplishment. Accomplishment criteria might include a) completed work efforts, 2) activities that confirm the value of the technical parameters, c) internal documents that provide results of in-process verification (successfully completed analysis or other testing activities), and d) completion of critical activities required by the contractor's internal program plans/operating instructions. Accomplishments criteria shall be measurable and include metrics to track detailed tasking in the IMS. Accomplishment criteria should avoid the use of "percent completed", and avoid citing data item report numbers rather than identifying and summarizing results (e.g. Test plan completed and accepted by the IPT" is a measurable criteria, whereas Test plan is 85% complete is difficult to assess).

Narratives. The contractor shall produce Narratives that are concise summaries that provide visibility into the proposed

functional and management processes and procedures. The contractor, in their narratives, shall describe how they relate to the integrated product and process development process. The contractor shall given an overview of the efforts required to implement them. Narratives shall be developed as a separate section and shall facilitate government evaluation of the contractor's capability to plan and execute a task. The contractor shall first, include a brief objective statement of each key task or event and state the desired results that are traceable to the task SOW and WBS. Next, the contractor shall list the proposed government, industry, national and international specifications and standards to be used to achieve the objective. The contractor shall clearly state which of these documents are in compliance, which will be a reference, and which will be tailored. Compliance documents shall be contractually binding while reference documents are for guidance only and are not contractually binding. The contractor shall also describe, in detail, the processes applicable to that objective. The contractor shall place emphasis on the application of process and not the development and /or implementation of processes. The narrative should not be a forum for providing supporting documentation or rationale (i.e. why a particular approach has been taken). It is strongly recommended that the contractor given attention to the following list of examples:

- Configuration Management
- Quality Assurance
- Information Assurance
- Software Development planning that identifies integration between systems engineering processes, software development and content development processes, as well as assurance of software quality
- Implementation of SCORM™
- Planning for information data exchange with the government and contractor (engineering data and ECPs)
- Design for reduction of life cycle costs
- Planning for subcontractor and associate contractor relationships
- Designing hardware system for anytime, anywhere access
- Planning for phase-in from predecessor to follow-on activities
- Implement change control process
- Internal and external interface planning, implementation and control

- Failure and deficiency reporting, analysis and corrective action planning

The Integrated Master Plan (IMP) shall include, at a minimum:

Plan of Work. The Contractor shall describe their management and technical processes, procedures, methodologies and tools for accomplishing the tasks identified in the SOW. The Contractor shall also describe, in detail, their Quality Assurance Processes and Configuration Management Procedures.

Work Breakdown Structure (WBS). The contractor shall produce a WBS to the fifth level. The WBS shall produce the Level 5 WBS, excluding level of effort activities. The contractor shall use the most current version of Microsoft Project and shall deliver any upload instructions, if required. The contractor shall use an estimated award date of DATE. The contractor shall show major program milestones as well as internal program critical dates and structures to ensure that all program critical dates are recognized and met. Integrated Master Schedule (IMS). The contractor shall produce an IMS and delivery with their proposal. The contractor shall produce a detailed task and timing of the work effort detailed in the proposed IMP. The IMS shall be used as the primary tracking tool for technical and schedule status. All tasks outlines in the IMS shall be related to specific IMP accomplishments. The IMS supports the IMP and provides a schedule for all the tasks, events, significant accomplishments and accomplishment criteria described in the IMP. The IMS also shall outline the detailed tasks and the corresponding calendar schedules (dates) necessary to show each significant accomplishment shall be achieved. Level of effort, or equivalent tasks, which are not critical to the successful execution of the program, may be limited or summarized at a higher level. (Refer to Attachment F for a list of IMS terms and definitions.) Schedule relationships reflecting excessive lead or lag time should be avoided. If excessive lead or lag times cannot be avoided, they must be explained. The contractor shall also include any other logic needed to recreate the schedule from the tabular data (e.g. directed or fixed dates or other assumptions not readily apparent in the tabular format). Constraints (other than “as soon as possible”) and directed dates plus the rationale supporting the need for each constraint or directed date in the schedule shall be identified and explained. Any activity with a duration greater than 280 days, unless it is a level of effort task, should be divided into activities with smaller durations or explained in a narrative.

Narratives. The contractor shall provide, in a separate section of the IMP, a series of narratives that detail the IMP. The contractor shall develop the narratives so that they (1) present a detailed insight into the their total planned work effort, (2) describe in detail how the contractor will develop, implement and commit to the efforts required for this SOW, (3) describe in detail the proposed key functional and management processes and procedures, (4) describe how they relate to integrated product and process development, and (5) define the efforts required to apply them to the SOW requirements. The narratives shall address key elements of implementing a process/procedure (e. g. what the process or procedure is and how it will be applied and tracked).

Processes, Procedures and Tools. The contractor, under separate section of the IMP, shall describe in detail, the processes, procedures and tools proposed in the completion of each task identified in the IMS/WBS.

Proposed Labor/Personnel. The contractor shall identify labor categories, personnel assigned to each category, summary of qualifications, task to be performed and projected hours to perform each task. A matrix shall be provided summarizing the labor hours, and number of personnel assigned to the completion of CDRL. Personnel shall also be identified on the required IMS, within the WBS, by task. The contractor shall submit the resumes for the proposed key labor categories in accordance with the basic contract.

Configuration Management. The contractor shall describe in detail their Configuration Management processes, procedures, tools and personnel involved.

Quality Assurance Program. The contractor shall describe in detail their processes, procedures, tools and personnel involved in Quality Control of all configuration items. This description shall include a detailed description, including flow diagrams, of the flow of work among the production teams and individual personnel. The contractor shall describe the roles and responsibilities of personnel assigned as part of the QA team, describe their interface with other team members and leads and describe the methods for tracking the various versions of configuration items. All training products produced under the ____ contract shall be reviewed by

the contractor's QA Team prior to delivery to the government. The QA Team shall be responsible for insuring they meet the required standards specified in the SOW, all ILE Style Guide requirements, the Learning Objectives, Instructional Strategies, Level of Interactivity and Test Strategies. The training products shall be delivered with no errors, deviations or omissions. The government shall not perform the QA for the contractor. If a training product is delivered reflecting a lack of QA on the contractor's part, the government will stop the review, reject the deliverable and return the product to the contractor for QA.

Risk Identification and Mitigation. The contractor shall identify all risks and define in detail how they will mitigate the risks. The contractor shall describe the updated list of risks and mitigation processes. Identification of risk items and associated risk mitigation or avoidance shall require constant vigilance and active participation at every level of the project (by both contractor and government personnel). The contractor shall be required to identify risk early and shall have the overall responsibility and accountability for risk management, to include both programmatic and technical risks. The contractor shall propose and implement a process to collect and analyze metrics that quantitatively measure the development of risk in key areas. These processes will be implemented for the purpose of identifying problems in the project development life cycle as early as possible.

Risks shall be identified, by the team members through a formal process of measuring the technical, cost, and schedule performance, or informally by filing a problem report. Risk is the responsibility of all team members and as such, IPT and working groups have an incumbent responsibility to conduct risk management activities. Risk identification may come from other sources, requirements/design impacts, lessons learned, earlier corrective actions, and action items. Once identified and approved as an item that requires further attention, risks will be captured in the risk database, managed by the contractor, and assigned a rating based on the Probability of Occurrence (Po) and the Severity of Outcome (So). The Probability of Occurance is an assessment of the likelihood that a risk will surface. Severity of Outcome is an assessment of the overall impact of the risk should surface. Severity can be assessed as either overall to the program or by subject area (e.g., technical, schedule, and cost). Risk items shall remain in the database until resolved or mitigated to a sufficiently low level. Risk schedules are integrated in the IMP and tracking is

performed during the regular IPRs. Top risk items are analyzed every two weeks and posted in V-POMS by the contractor.

Materials. The contractor shall identify the materials required for accomplishment of each of the tasks identified in the IMS/WBS. The contractor shall describe their proposed processes, procedures and tools for inventorying and maintaining Government Furnished Equipment, Materials and Information.
Travel. The Contractor shall identify travel requirements, who will be traveling and identify the purpose or tasks to be accomplished, for each trip and each individual proposed for travel.
Other. The Contractor may initially provide a section in the Management Plan identifying recommended new processes and procedures that will reduce waste, increase cost-effectiveness of the content, reduce production time, and/or reduce labor costs. Each recommendation must be described in detail citing the projected savings in time and dollars. If the Government accepts any of the recommendations, notification will be provided in the Contract Kick-off Design Meeting. Acceptable recommendations will be added, via change pages, to the appropriate section/paragraph.

The IMP and IMS shall be delivered as part of the Contractor's Proposal and after acceptance by the Government, will become part of the contract. The IMP and IMS will be updated every two weeks throughout the life the contract.

Design Requirements.

Shareable Content Object Reference Model (SCORM™). The contractor shall implement the latest version of SCORM™, as required by government and as defined in the approved ILE Style Guide. The contractor shall map the instructional model found in the Style Guide to a common Course Structure Format (CSF) in order to operate the government furnished Electronic Performance Support System (containing Learning Management System functionality). The application of SCORM™ shall provide code to allow for the creation of a course structure, the content of a course element and the course, and content metadata so that content can be identified and found in repositories, delivered over the Web, and managed by a LMS. The contractor shall produce the required metadata tags for all training products in order to identify reusable learning objects. The contractor shall use the government furnished content object repository as the data repository for course, lesson, segment, topic, block, SCO, Learning Objective, and raw media element.

Each of these shall be tagged with SCORM™ required metadata. Metadata shall be stored in a separate database linked to the content object repository.

Metadata tags. The contractor shall tag, develop and store metadata in accordance with the government approved Design/Interface Guide. The contractor shall assign, at a minimum, the appropriate attributes as required by the Design/Interface Guide. This may include:

a. Content. Provides the value information in the name/value pair. It can be any valid string.

b. HTTP-equiv. This attribute is used by the server to include that name/value pair in the Multi-Purpose Internet Mail Extensions (MIME) document header passed to the Web browser before sending the actual HTML document. Some common HTTP-equiv types are:

   Charset. A charset defines the character set used in the page, for instance when a page expires or when it will go out of date.
   Refresh. Refresh sets the number of seconds to reload the page or reload to a new page.
   Name. This is the name portion in the name/value pair. Any name can be used that might be useful. Some common names are:
   - **Keywords**. Words that identify what the page is about, usually used in search engines. Keywords help search engines to categorize Web sites, and to allow people to find pages more quickly. However, most search engines have limits as to how many meta keywords are viewed. Keywords should be as concise and specific as possible.
   - **Description**. Gives a short description of the page. Engines that use it will supply the content of this tag when displaying a list of links.
   - **Author**. The author's name and possibly their e-mail address is indicated.
   - **Copyright**. The name "copyright" identifies the date of the copyright and date of the page.

EPSS and LMS Functionality.

Content Object Repository.

Development Requirements

Training Products. The contractor shall develop and install the _____ training products as required by the CDRLs. Content will be delivered incrementally and shall be available for student use as soon as accepted by the government. During development, the maintenance community will have a schoolhouse up and running

Training Program Structure Document. The contractor shall produce and deliver a Training Program Structure Document that describes the scheduled order of presentation of the Units of Instruction, the Lessons and the Tests for the EAC and maintenance courses. The contractor shall write the schedule for the purpose of planning out the NAMTRAGRU requirement of presenting tests approximately every 40 hours. The contractors shall make a recommendation for the placement of the tests based on number of hours and amount of content to be evaluated. The tests may be presented less than or more than 40 hours based on the amount of content and the events within the course. The government will review and approve the contractor's recommendations. The schedule will be used by the contractor to plan access/presentation of materials to the student on the Learning Portal, in the classroom and in the Learning Center. .

Design Strategy (Lesson Specification). The Contractor shall design and deliver an electronic Design Strategy, in accordance with the CDRL. The Design Strategy
shall, at a minimum, identify:

- Lesson Title
- Length of Lesson
- Learning Objectives
- Level of Interactivity (LOI)
- Delivery Method (Group or Self-paced)
- Instructional strategies (Drill and Practice, Tutorial and Inquiry, Simulation, Gaming, Problem Analysis, Collaboration, etc)
- Media to be used (2D/3D still, 2D/3D animation, video, audio, text, digital photos or a combination of types)
- Length of lesson
- Content outline
- Testing Strategy with sample test questions
- Reference Documentation

The Contractor shall produce the Design Strategy Document using an automated tool. The tool shall meet all specification required in the SCORM™ standard and shall reduce time to produce as well as automate the tagging process. The tool shall be linked to other production tools, to include Script/Storyboard, test development and On-Screen Development.

Script/Storyboards (Instructional Media Package) . The Contractor shall develop and deliver electronic Script/Storyboards that describe each specific training screen within a lesson. The Script/Storyboard, at a minimum, must contain a visual representation of all objects on each screen, written descriptions of all media (graphics, animations, photographs, video and audio), programming instructions, lists of source materials and references. Upon final delivery to the Government, and at the completion of the contract, Script/Storyboards must contain all file names (source model, object and final image displaying all objects), audio files, video files, any programming code used, and metatagging information. The Contractor shall deliver Script/Storyboards in accordance with the CDRL. The contractor shall use a Script/Storyboard development tool to reduce production time and automate tagging process. It is preferred that the Script/Storyboard tool will produce an electronic product that with implementation of government DRs, will produce the on-screen lesson, thereby reducing production time. The Script/Storyboard tool must reuse data in the Design Strategy/Lesson Specification Tool.

On-Screen Lessons (Instructional Media Package). The Contractor shall develop On-Screen Lessons based on the Government accepted Script/Storyboards. The Contractor shall incrementally deliver On-Screen Lessons, as required by the CDRL. The On-Screen lessons shall be delivered with the implementation of the Script/Storyboard DRs. Minimal effort shall be required to produce the On –Screen Lessons with the use of the required production tools.

Lesson Plans. The contractor shall produce Lesson Plans for all CAI lessons under modification as well as for CAI lessons requiring new development. The Lesson Plans shall be displayed on a dual monitor system and shall be synched with the graphics linked to each concept. The contractor shall deliver the Lesson Plans for review with the On-Screen Lesson.

Trainee Guides. The contractor shall produce Trainee Guides for all CAI lessons under modification as well as for CAI lessons requiring new development. The contractor shall deliver the final Trainee Guides in a three-ring notebook with cover identifying the lesson titles and lesson

numbers. The contractor shall deliver 8 final paper copies of the Trainee Guide assigned to each lesson. Draft copies shall be delivered On-Screen Lessons via the V-POMS.

Test Package (DI-ILSS-81525A). The contractor shall produce an automated test bank, as detailed in the Government approved ILE Style Guide. Tests must also be capable of being printed and administered by the instructor. The contractor shall use an automated tool linked to the Design Strategy/Lesson Specification, Script/Storyboard, and On-Screen Development Toolset. Instructors must be capable of adding, deleting, or modifying test items in the bank. The test bank shall be capable of displaying graphics, animations, and simulations. The test bank must also be capable of all presenting multiple choice, matching, completion, and true/false, as well as scenario and simulation styles of test questions.

Refresh Rates. The contractor will use web design and file compression techniques throughout development to maximize the speed and efficiency of the courseware played over the web as well as from dial-up (home use). One way the government will validate this requirement is by timing the screen refresh rate during maximum use of all stations connected to the file server. When a system, lesson, screen, or a timed event is activated, the screen must completely refresh (all objects) in two seconds or less. There shall not be any delays incurred by the user after activating any button, animation, video, audio, or a timed event.

Software. The contractor shall produce the ____ ADL training system using COTS software. Content shall be developed with web-based tools having an HTML/XML output. All software shall be selected based on the capability, ease of use, and life cycle management costs. Final approval of the software, by the government, will occur in the Design Meeting held within 7 working days after contract award.

Training System Support Document. The contractor shall produce and deliver in accordance with the CDRL and the government approved IMS. The Training System Support Document shall have two major sections. Section One shall describe the operation of the training system to aid schoolhouse personnel in full and effective use of the system. Section Two shall provide the documentation required for explanation of the software used, procedures for utilization of all software utility programs, support software file generation and system performance characteristics verification for the purpose of life cycle management.

Database Description. The contractor shall produce a Database Description Document describing in detail the design of the database. The Database Description shall be delivered in accordance with the CDRL.

Source Materials and Training System Support Product Requirements.

Instructional Media Data Files (Instructional Media Package). The Contractor shall deliver all logic source files, transportability and maintainability data, portability commands, content data files, instructional media generation programs and files, and developmental source materials.

The contractor shall deliver and load all training products and source data described in paragraph on the government provided server. The contractor shall deliver the server and install at the government approved location. The government shall insure that the server works, as required, and that all source data is loaded. The government shall conduct this test through a final on-site acceptance test. The Government will use the contractor produced Test Plan during the test and validation of the system. Refer also to Section 5.0 for the minimum hardware, software and system requirements to design to. Delivery shall be in accordance with the CDRL and the government approved IMS.

Integration Requirements.

Installation, Verification and Test. The contractor shall integrate the software and content with the existing on-site hardware. Integration shall begin after acceptance of each unit of instruction and shall continue through final government acceptance of each course. Special planning is required to insure that integration of the modified and new maintenance content shall NOT impact the performance of the school. Separate servers shall be used for development and revision prior to government acceptance. After acceptance, the maintenance content shall be loaded to the schoolhouse server on a not to interfere basis. If the students are currently taking the unit of instruction ready for loading, the contractor shall delay loading until the students have completed the unit.

Test Plan. The contractor shall produce a Test Plan. The approved Test Plan shall be used by the government to test the Learning Portal, EPSS, and first unit of instruction produced for the pilot training course. The Test Plan shall include the procedures, tools and checklists to install the portal, the EPSS, and the content. The government Test Director shall load the

software/content and test to ensure that the system works as required by the SOW. The contractor shall present in their IMP and IMS a plan for the government to periodically load and test approved content. The government, in each case will use the Test Plan to conduct the test. The government shall also have remote users log on and test the system. The Test Plan shall be modified, and change pages provided, as required.

DATA RIGHTS

Unlimited Rights Agreement. The Government will not pay royalties, recurring license or run-time fees, use tax or similar additional payments for the contract developed content or associated multimedia production/authoring/presentation software packages necessary to produce, modify, or view/execute the content.

Note: Licensing fees required for database software is the only exception to this statement. The contractor shall strive to keep licensing fees to a minimum. Capability and life-cycle cost shall be always be a consideration.

Licensing/Ownership Rights. All data, including but not limited to source files, 2D and 3D imagery, 3D models and wire-frames, video, audio, animations, design documentation, other support documentation and content, developed by the Contractor are the property of the Government and are not to be used for resale to any Government agency, organization, or Command. All data is to be loaded into the Media Depot on the government provided server and delivered in accordance with the CDRL.

GOVERNMENT FURNISHED MATERIALS

Government Furnished Information. The Contractor will be provided the following GFI:

a.
b.
c.
d.

The Contractor shall submit, in writing, a list of any additional GFI they might require. This written list will be presented to the APM(TS) at the Contract Kick-off and Design Meeting. Subsequent requests for GFI will be provided in writing to the designated TPOC, with a copy to the APM(TS). The Government, in each case, will have fourteen calendar days to respond.

Government Furnished Equipment.

SECURITY

Security Requirements. When on-site, the Contractor shall also adhere to all local security procedures required by the end-user, as well as the security procedures dictated in DD Form 254 DOD Security Classification Specification. This is an UNCLASSIFIED program.

This page intentionally left blank.

J: NROM EXAMPLES AND MODELS

PRACTICUM EXAMPLE

The following is an example of a practicum. It would require the following metadata:
5.2 Learning Resource Type: practicum

Surface Warfare Officer School: Division Officer at Sea Training

Practicum Title
Man Overboard

Module Number	Module Name
7	Ship Handling

Topic Number(s)	Topic Name(s)
7.03	Man Overboard

Related E.O.(s)	Related PQS
2.134, 2.136 - 144	43101-4E: 149.5-8, 301.5.7, 302.2.54-55, 302.5.1

Leadership Core Competencies
Responsibility, Accountability, and Authority. Decisiveness/Risk Management. Problem Solving. Technical Credibility. Team Building. Combat and Crisis Leadership. Professionalism. Flexibility. Service Motivation. Partnering. Political Awareness. Oral Communication.

I. Reference(s)

Locate C.O.'s Standing Orders regarding man overboard.

A. What is the preferred recovery method for your ship taking into consideration weather and time of day?

B. What is the highest sea state allowed for a forecastle recovery?

C. What is the highest sea state allowed for a boat recovery?

D. According to FXP-3, what is the time limit placed on each method from start to recovery for your ship?

II. Locate System/Equipment

A. Refer back to Practicum 2-2 regarding boat davits.

B. With the assistance of the First Lieutenant or the leading Boatswains Mate, review forecastle recovery equipment.

III. Observe Man Overboard FROM the Bridge

Shadow the Conning Officer during shipboard recovery.

A. Observe actions by the Conning Officer during an Anderson turn.

1. Follow the Conning Officer to the Bridge Wing and note their actions.
2. Note how the Conning Officer used information passed from CIC.
3. Note which side of the man the Conning Officer positions the ship.

B. Observe actions by the Conning Officer during a Williamson turn.

1. At what point does the Conning Officer shift the rudder in the turn?
2. Follow the Conning Officer to the Bridge Wing and note their actions.
3. Note how the Conning Officer used information passed from CIC.
4. Note which side of the man the Conning Officer positions the ship.

C. (if applicable) Observe actions by the Conning Officer during a Racetrack Turn.

1. Make same observations as in A 1 - 3.

D. (if applicable) Observe actions by the Conning Officer during a delayed turn.

1. Make same observations as in A 1 - 3.

E. Observe how the Conning Officer creates a lee for the man in the water.

F. Observe actions of the davit crew during boat recovery.

G. Observe actions of the Conning Officer during flight quarters for helo recovery. (if applicable)

H. Observe actions of the First Lieutenant and deck crew on the forecastle during shipboard recovery.

1. Note how the equipment is used.
2. Note how the rescue swimmers prepare for water entry.
3. Observe the actions of the Safety Officer.

4. Observe the steps taken for the safe deployment of a rescue swimmer from the davit.
5. What lines are used on deck?
6. Who has the final decision to deploy the rescue swimmer?

I. Observe actions of the CIC watch team during Man Overboard.

1. Note the actions of the DRT operator.
2. Note the words passed to the Bridge by the CICWO.
3. Observe the actions of the watch team.

IV. Operate Equipment or Perform a Function

Shadow the Boat Officer during a man overboard drill.

A. Act as bow hook during recovery.

B. Assist signalman with communications with the Bridge.

C. Observe how the signalman receives direction signals from the ship.

D. Watch the actions of the Boat Officer after the signalman receives the information.

E. Note the procedure for actual recovery of the individual.

F. What actions does the Corpsman take when the individual is in the boat?

SCENARIO EXAMPLE

The following is an example of how three scenarios are used to create a practical problem. If the entire practical problem was designed as an RO it would require the following metadata *5.2 Learning Resource Type: scenario*. However, if each of the three scenarios were designed as three individual ROs within a RIO, then each RO would require the *5.2 Learning Resource Type: scenario* metadata, as would the RIO require the appropriate metadata. Additionally, if the practical problem fulfilled an enabling objective or a terminal objective it would be designed as either a RIO or a RLO respectively, requiring the appropriate metadata. In addition to identifying the scenario(s) with the appropriate metadata, it is highly suggested that you also use metadata to identify the practical problem and use *5.2 Learning Resource Type: other*. In which, you would also have to use the *1.4 Description* tag to describe the *practical problem*. The different ways in which this practical problem can be designed exemplify how the NROM allows for the application of various ISD to ensure performance-based outcomes.

Surface Warfare Officer School: Division Officer at Sea Training

Practical Problem Title
Man Overboard

Module Number	Module Name
7	Shiphandling

Topic Number(s)	Topic Name(s)
7.03	Man Overboard Procedures

Related E.O.(s)	Related PQS
2.208 – 214	43101-4E: 149.5, 149.7

Leadership Core Competencies
Responsibility, Accountability & Authority (RAA); Decisiveness / Risk Management (DR); Problem Solving (PS); Technical Credibility (TC); Oral Communication (OC)

For each scenario below, answer the following questions:

1. What actions do you take immediately? (TC)
2. What type of turn would you use in this situation (if any)? (TC)
3. What type of recovery are you going to attempt? (RAA, DR, PS, TC)
4. What reports are being passed up to you from CIC? (OC)
5. Would you order the Helicopter deployed? (RAA, DR, PS, TC)

6. What orders would you give CIC? (RAA, DR, PS, TC, OC)
7. What words would you pass over the 1MC? (TC, OC)
8. What actions would the DRT operator take? (TC, OC)
9. What are your major concerns for the man in the water, given this scenario? (RA, DR, PS, TC)

I. Scenario One

You are the Conning Officer on your ship. The crew has just conducted morning muster. It is reported to the Bridge that SA Gonzalez was not at muster. The Officer of the Deck orders the ship searched for him. After an initial search it is reported that no one has seen him since he was relieved from the aft lookout at 0345. You are in the Indian Ocean transiting from Diego Garcia to Muscat, Oman. The seas are calm and the engine room reports the seawater injection temperature at 89° F. You have a SH-60B Helicopter detachment onboard. The Commanding Officer tells you, “I have never lost a man at sea, and I don’t intend on having Gonzalez being the first. Find him!”

II. Scenario Two

You are the Conning Officer on your ship steaming independently. It is 1645 and it is getting dark quickly. You are off the coast of Japan in November. The seawater injection temperature is 45°F. The seas are moderate with 5 foot swells coming from the southwest. It is gray and overcast with a slight mist. The Boatswains Mates are doing PMS on the lifelines on the forecastle. The Executive Officer is on the Bridge and is concerned about the workers on the forecastle at this time of day. The workers continue with their tasks. It is now 1715 and is almost dark. The XO tells the BMOW to pass the word for the First Lieutenant to contact the XO on the Bridge. Just then, one of the Seaman slips and falls over the port side.

III. Scenario Three

It is 0200 and you have just left the Kitty Hawk Battle group off the Northwest coast of Luzon. You have been ordered to steam independently to a scheduled port visit in Manila. The forward lookout hears something off the starboard side. He looks over the side and sees a small fishing boat float by. It appears to be submerged to the gunnels. There are 3 men on board yelling and waving their arms. He throws a life ring in the water and yells, “Man Overboard!”

ASSESSMENT EXAMPLE

Let's consider a single Asset that is a MacNROMedia Flash File (i.e., .swf) (see **Error! Reference source not found**. ~~Figure 19~~) used as a Knowledge Check as for a practice item contained within a learning event. You decide that this Knowledge Check is specific not only to the learning event that it was created for, and that it would be easy to reuse this Asset either within or across communities. Therefore, you have determined that it has reuse potential and it should be considered an RO.

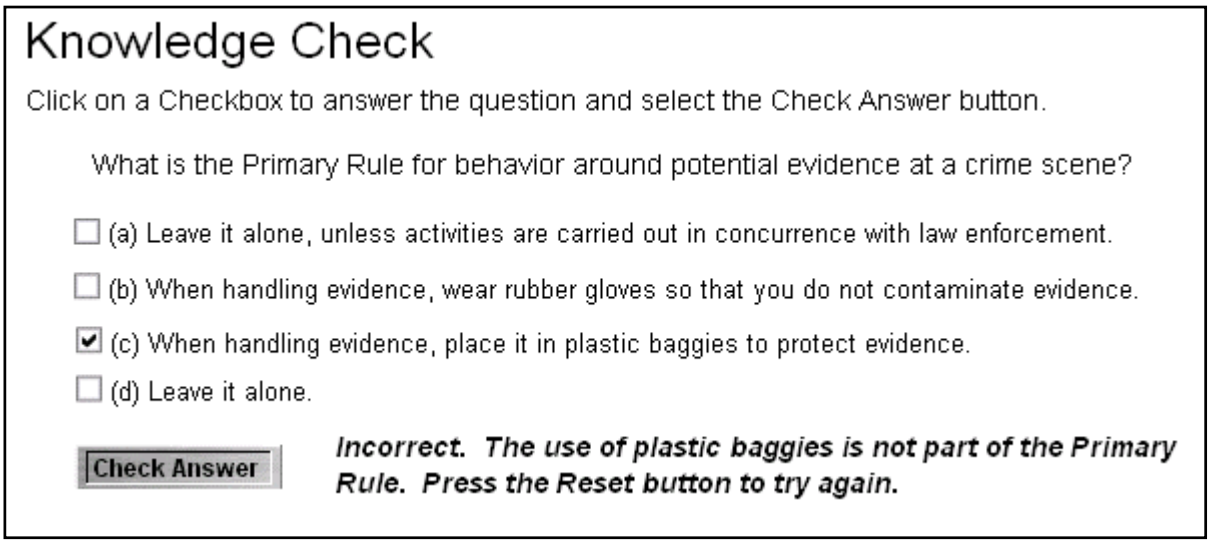

Figure 20 ~~19:~~ A media Asset (i.e., a .swf) that has reuse potential to be considered an RO

The Knowledge Check example in **Error! Reference source not found**. ~~Figure 19~~ includes several parts (e.g. directional, stem (i.e., the question), items (i.e., a-d), and feedback text, title, and a button). However, since it was created using Macromedia Flash™ to develop as single media Asset—an animation in the form of a Flash file (.swf)—it exists as a single file and cannot be broken into separate Assets.

ASSET EXAMPLES

Figure 21 ~~20:~~ Asset (graphic)

Figure 22 ~~21:~~ Asset (graphic)

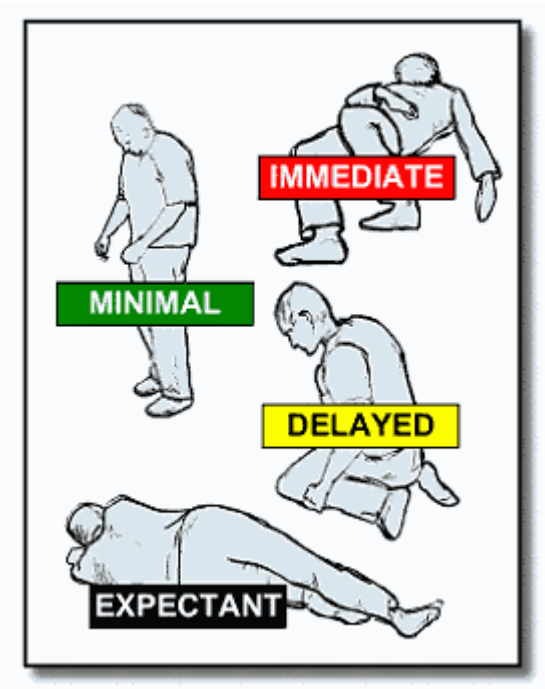

Figure 23 ~~22:~~ Asset (graphic)

Figure 24 ~~23:~~ Gratuitous/Incidental Asset (decorative graphic)

This page intentionally left blank.